Print Number:　　Print Date:

NOBLELIFT

Scan QR Code for More

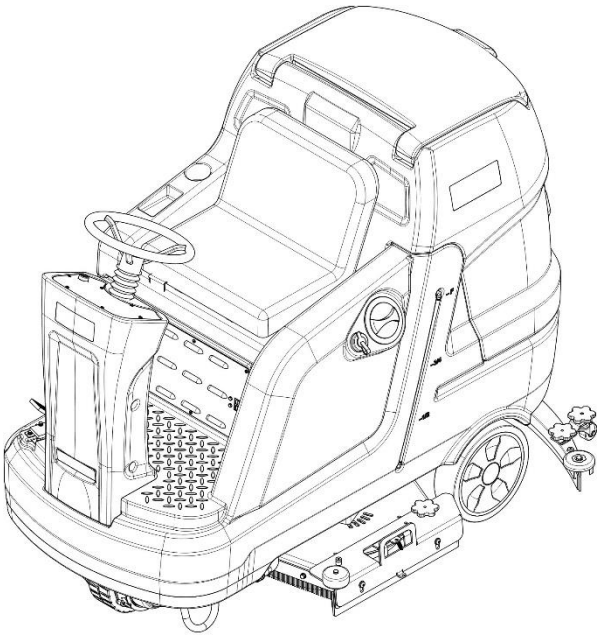

Rider Scrubber

NR1060/860P

Parts Manual

590746020112

Version V12

Scrubber Identification Number From:

Parts Manual NR1060-PM12EN

Please order parts from authorized dealers of our company.

In order to avoid wrong delivery, all the orders for spare parts should specify the following items:

- Truck model, identification number and manufacture year.
- Orders for spare parts of mast, hydraulic transmission unit, steering axle, motor, etc. shall indicate the manufacture number of these parts.
- Codes for our company spare parts are shown in the table of parts manual. Please also pay attention to the description of supply status, order quantity, etc. (check the number listed in "Mark" column of the parts manual).

"Mark" Column:

The unmarked indicates the parts are in short supply cycle.

Number 1: supply as package. Indicating these that parts are small parts and seal parts, which are supplied in package unit and in short supply cycle.

Number 2: supply with constraints. Indicating that these spare parts are not in stock and will be prepared for production after receiving the order from customers, which are in long supply cycle.

Number 3: phasing-out supply. Indicating that these parts will be replaced by new parts due to technical improvements and the current stock will not be available when these parts run out. Please check the description of technical improvements notice.

Number 4: supply as assembly. Indicating that these parts are assembly parts defined by manufacture process, which cannot be supplied as a single part.

Number 5: check other tables.

This parts manual is the property of our company and can be shared under the confidential agreement only, our company has the right to claim for compensation of any unauthorized use. Copy without permission is not allowed. Figures in the manual are not limited by the original design. our company reserves the right to improve the products for continuous technology progress.

Table of Contents

Chapter 1: Drive system 1
01 Drive Unit (590746013501) 1
Chapter 2：Truck Frame 3
01 Solution Tank (590746021501) 3
01 Solution Tank (590746021501) Continuation 5
02 Recovery Tank (590746021502) 7
03 Frame (590746017001) 9
04 Brush System (590746021503) 11
04 Brush System (590746021503) Continuation 13
05 Squeegee System (590746021504) 15
06 Retaining Edge (590746021505) 17
07 Solution Assembly (590746021506) 19
08 Wiper Frame (590746017002) 21
09 Front Body (590746021507) 23
Chapter 3：Electrical parts 25
01 Electronic Control Components (590746033001) 25
02 Traction Battery (590746037001) 27
03 Charger (590746036501) 29
04 Wire Harness (Lead-acid battery) (590746033002) 31
05 Wire Harness (Lithium battery) (590746033003) 33
Chapter 4: Others 35
01 Labels and Decals (590746047001) 35
02 Labels and Decals (590746047002) 37
Appendix 39
01 Electrical Circuit Diagram (Lead-acid battery) (590746045501) 39
02 Electrical Circuit Diagram (Lithium battery) (590746045502) 40
03 Easy Wornout Parts List 41
04 Consumable Parts List 42

Chapter 1: Drive system

01 Drive Unit (590746013501)

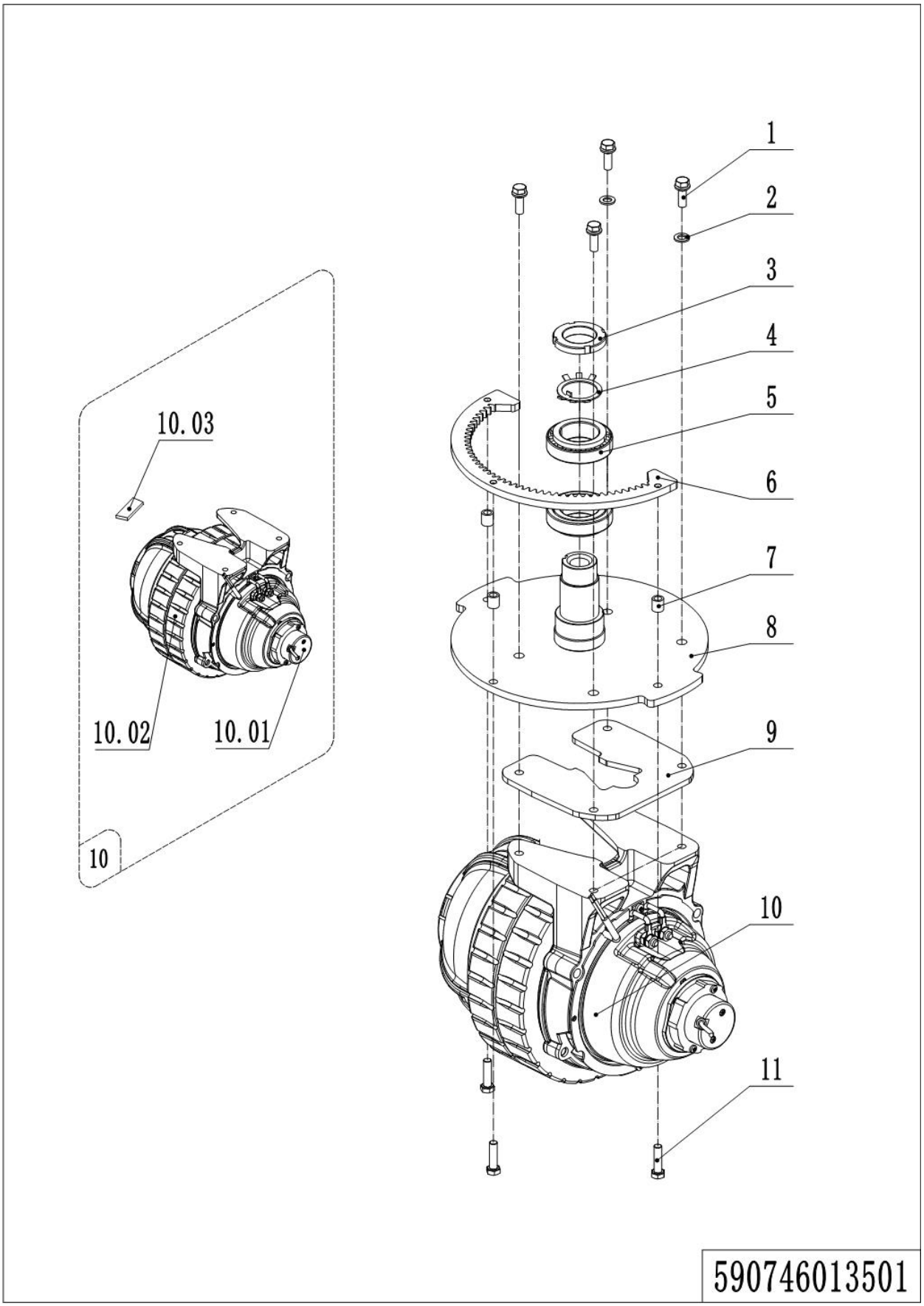

1= Supply as package. 2= Supply with constraints. 3= Phasing-out supply. 4= Supply as assembly. 5= Check other tables.

01 Drive Unit (590746013501)

No.	Item Code	Mark	Item Description	Qty.	Substitute	Note
1	590198520181		Screw M10x30	4		
2	590198520073		Spring Washer	4		
3	590398520065		Nut M36	1		
4	590398520054		Gasket	1		
5	590398520075		Bearing	2		
6	590798520029		Ring Gear	1		
7	590798520055		Spacer Bush	3		
8	591398520050		Mounting Plate	1		
9	591398520001		Raising Plate	1		
10	590798510006		Drive Unit	1		
10.01	590798520162		Brake	1		
10.02	590798520161		Motor Pulley	1		
10.03	590798520163		Carbon Brush	4		
11	590198520145		Screw M8x30	3		

Chapter 2：Truck Frame

01 Solution Tank (590746021501)

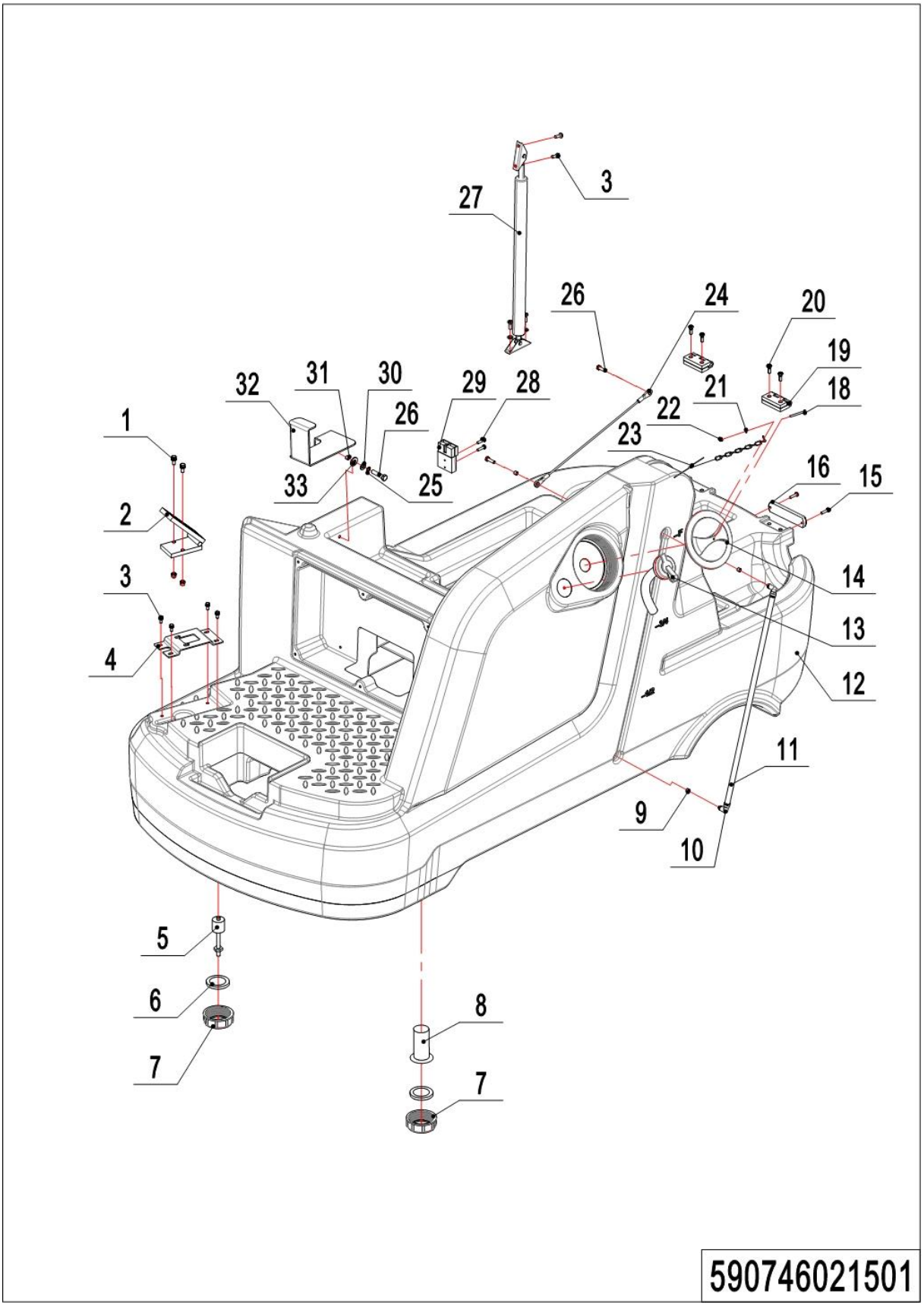

01 Solution Tank (590746021501)

No.	Item Code	Mark	Item Description	Qty.	Substitute	Note
1	590198520104		Screw M8x16	2		
2	590798510004		Accelerator	1		
3	590198520142		Screw M6x16	8		
4	590798520026		Fixed Sheet Metal	1		
5	590798510009		Solution Tank Sensor	1		
6	590798520126		Rubber Pad	2		
7	590798520008		Drain Cap	2		
8	590798520004		Filter	1		
9	590198520136		Rubber Plug	2		
10	590198520128		Right-angle Joint	2		
11	590798520239		Hose	1		0.54m
12	590798520009		Solution Tank	1		
13	590498520053		Water Pipe	1		
14	590798520007		Water Filling Cap	1		
15	590198520092		Screw M4x10	2		
16	590398510010		Warning Light	1		
17	590398520095		Chain	1		
18	590198520101		Screw M3x25	1		
19	590798520052		Hinge	2		
20	590198520104		Screw M8x16	8		
21	590198520190		Gasket	1		
22	590198520102		Nut M3	1		
23	590798520124		Torsional Spring	1		
24	590798520057		Rope	1		
25	590198520075		Spring Washer	1		
26	590398520137		Screw 8x6xM6	2		
27	590798520051		Gas Spring	1		
28	590498520082		Screw M5x30	2		
29	590798510020		Wire Harness	1		
30	590198520079		Gasket	1		

01 Solution Tank (590746021501) Continuation

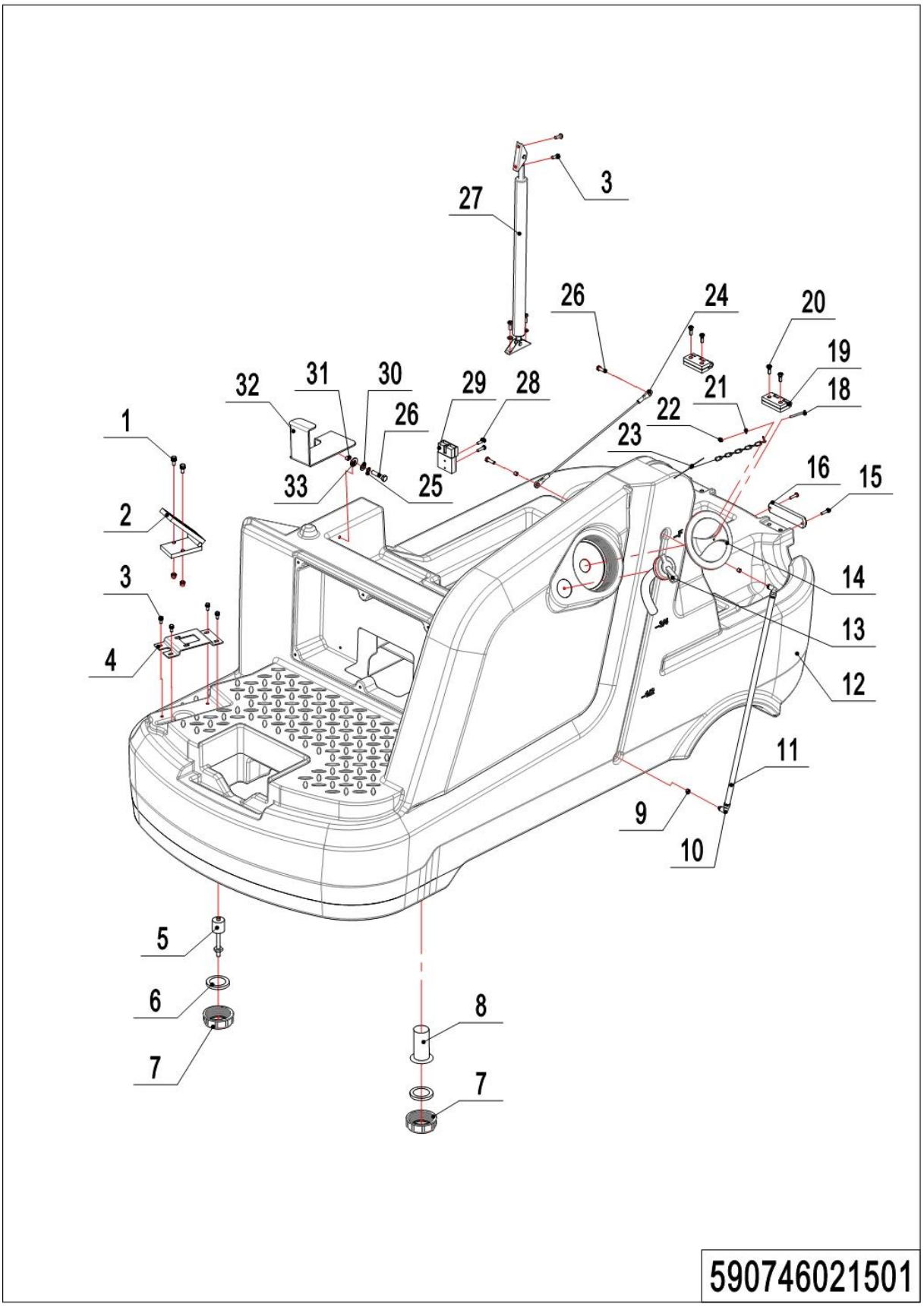

01 Solution Tank (590746021501) Continuation

No.	Item Code	Mark	Item Description	Qty.	Substitute	Note
31	590198520038		Spacer Bush	1		
32	590798520030		Support Bracket	1		
33	590198520081		Gasket	1		

02 Recovery Tank (590746021502)

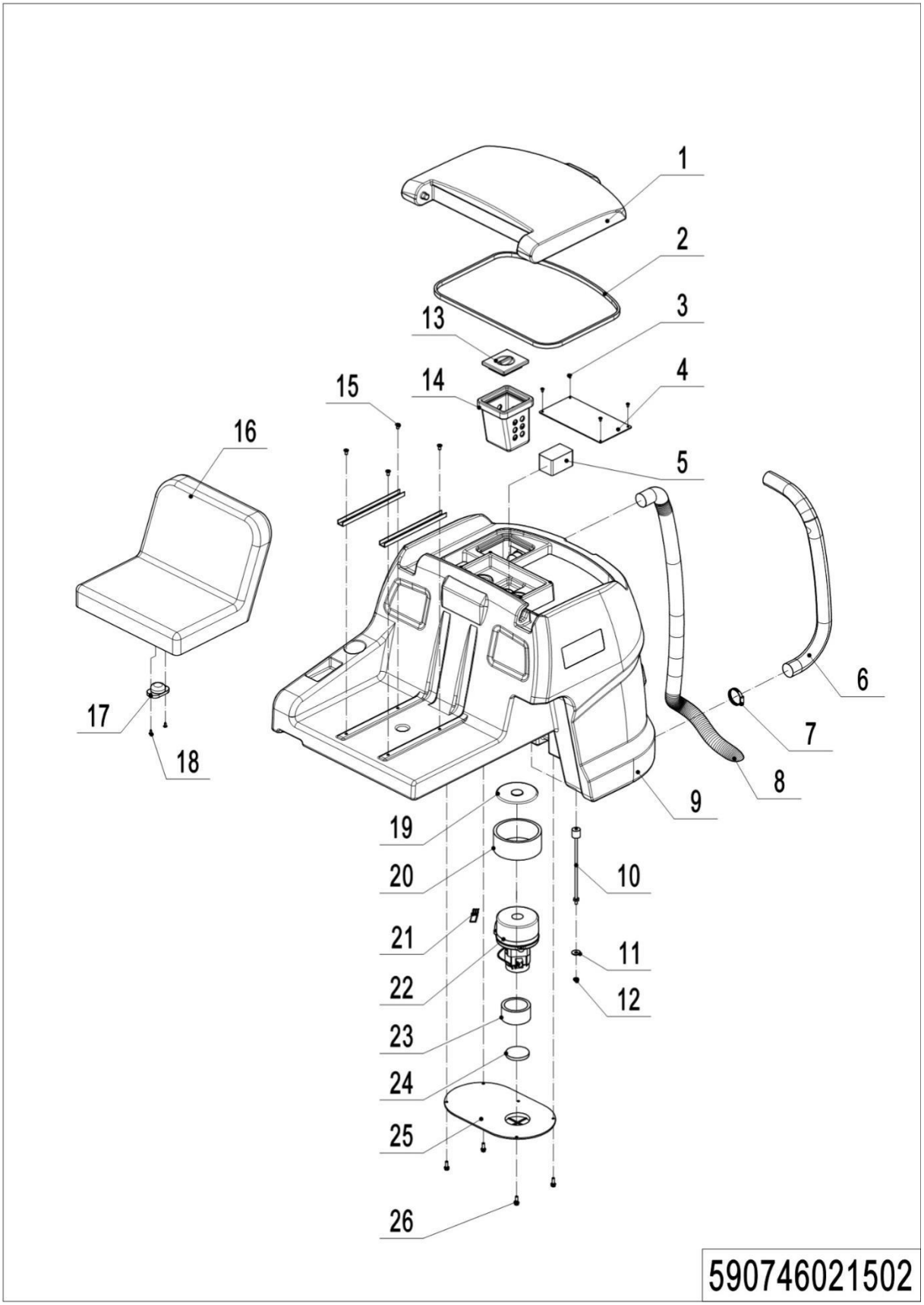

02 Recovery Tank (590746021502)

No.	Item Code	Mark	Item Description	Qty.	Substitute	Note
1	590798520012		Recovery Tank Cap	1		
2	590798520261		Sealing Strip	2		2m
3	590398520090		Screw M3.5x13	6		
4	590798520033		Water Barrier Plate	1		
5	590798520037		Filter Foam	1		
6	590798520041		Drain Hose	1		
7	590798520053		Hoop	1		
8	590798520042		Suction Pipe	1		
9	590798520010		Recovery Tank	1		
10	590798510008		Recovery Tank Sensor	1		
11	590198520080		Gasket	2		
12	590798520059		Nut M10	1		
13	590798520006		Garbage Box Cap	1		
14	590798520005		Garbage Box	1		
15	590198520104		Screw M8x16	4		
16	590798520038		Seat	1		
17	590798510012		Seat Switch	1		
18	590798520085		Screw M4x12	2		
19	590198520054		Sealing Ring	1		
20	590198520056		Silencing Foam	1		
21	590798520138		Carbon Brush	1		
22	590798510003		Vacuum Motor	1		
23	590198520197		Sealing Pad	1		
24	590198520058		Filter Foam	1		
25	590798520028		Fixed Plate	1		
26	590198520142		Screw M6x16	6		

03 Frame (590746017001)

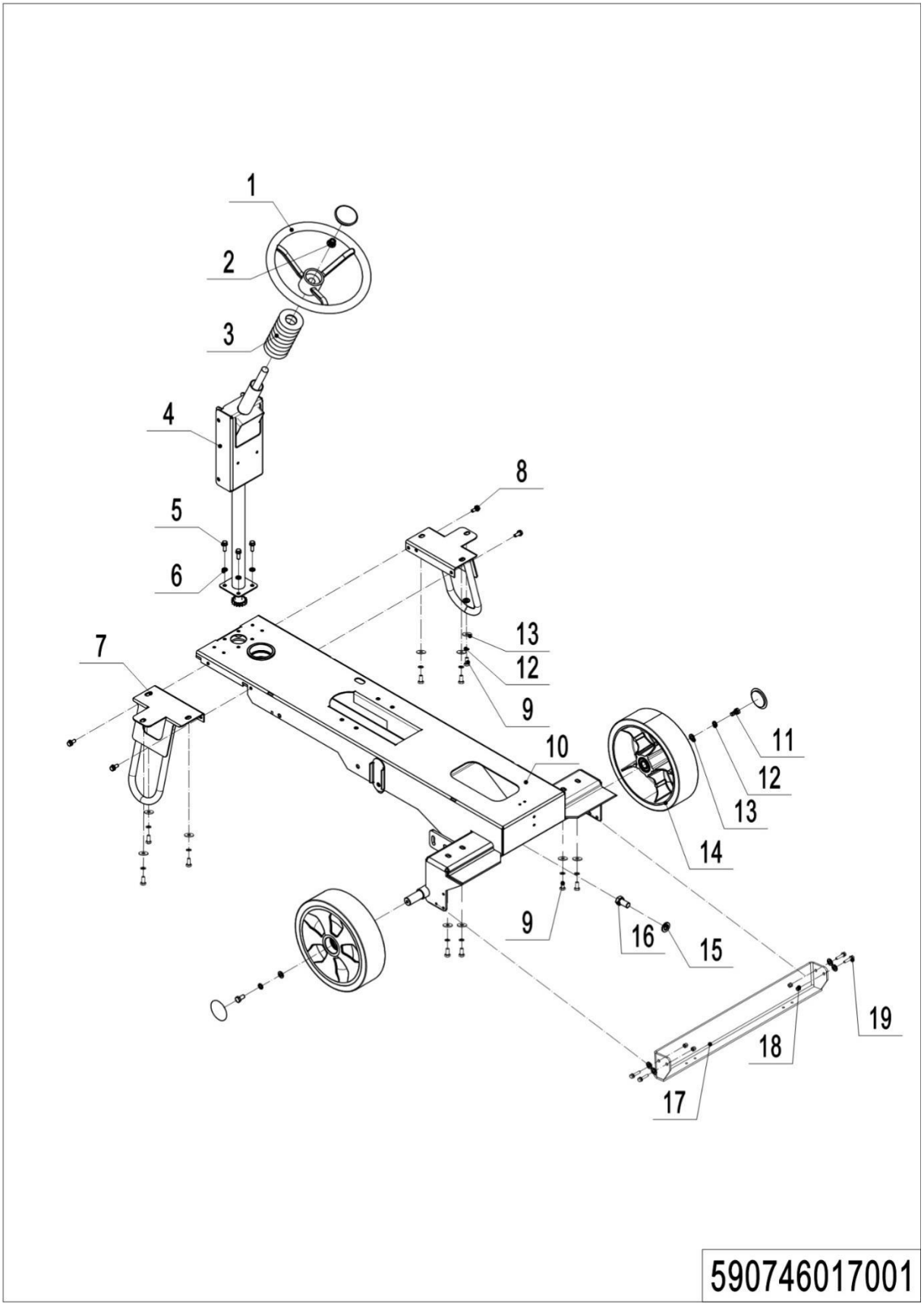

03 Frame (590746017001)

No.	Item Code	Mark	Item Description	Qty.	Substitute	Note
1	590798520039		Steering Wheel	1		
2	590798520058		Nut M16	1		
3	590798520040		Protective Cover	1		
4	590798520036		Steering Mechanism	1		
5	590398520049		Screw M8x25	4		
6	590198520081		Gasket	4		
7	590798520031		Anti-rollover Bracket	1		
8	590198520069		Screw M8x20	4		
9	590198520086		Screw M10x20	10		
10	590798520016		Frame	1		
11	590198520126		Screw M10x25	2		
12	590198520073		Spring Washer	12		
13	590198520080		Gasket	12		
14	590798520014		Rear Wheel	2		
15	590398520086		Spring Washer	1		
16	590398520058		Screw M16x25	1		
17	590798520125		Rear Frame	1		
18	590198520067		Nut M6	4		
19	590398520048		Screw M6x20	4		

04 Brush System (590746021503)

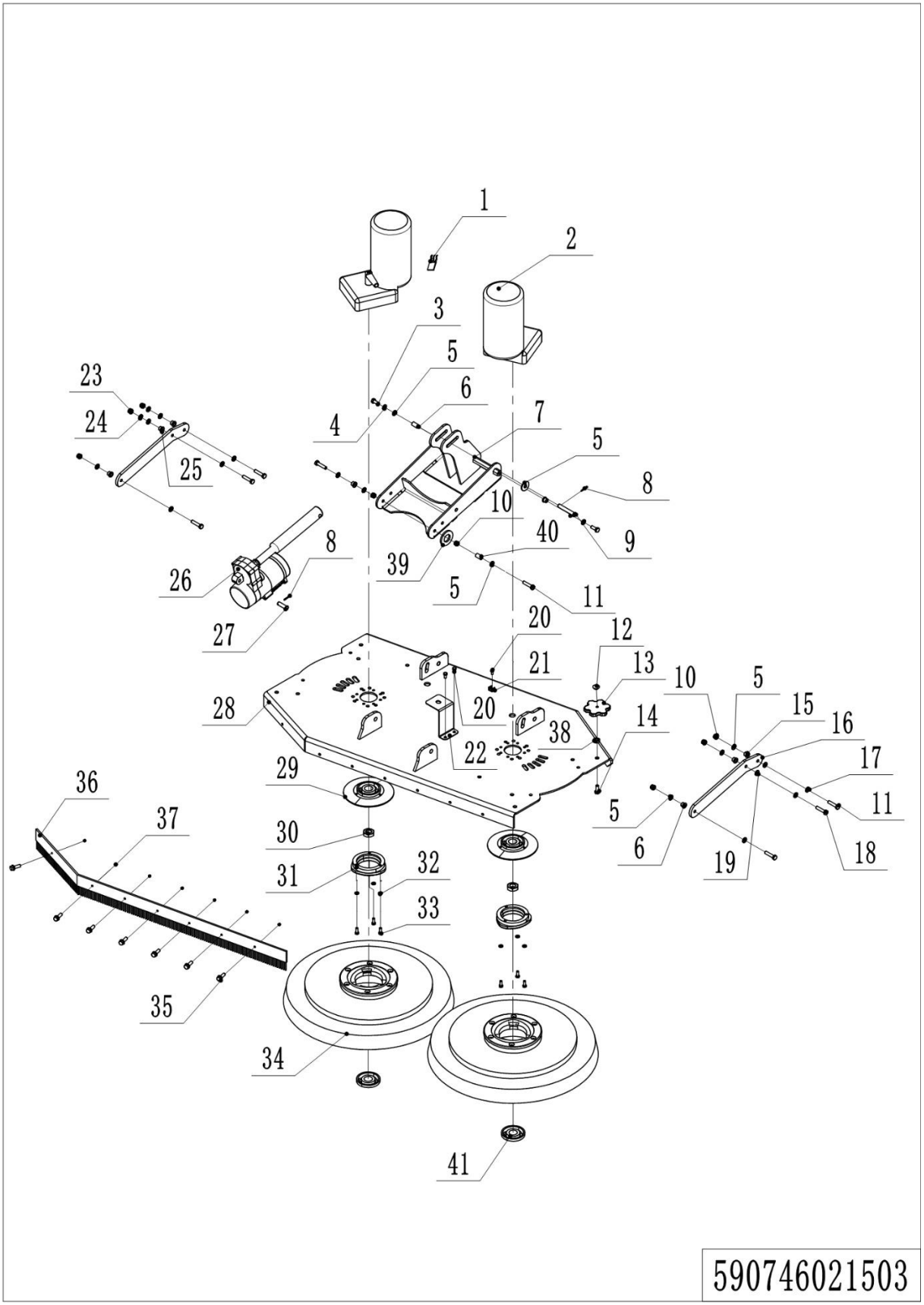

04 Brush System (590746021503)

No.	Item Code	Mark	Item Description	Qty.	Substitute	Note
1	590798520135		Carbon Brush	2		
2	590798510005		Brush Motor	2		
3	590198520181		Screw M10x30	2		
4	590198520073		Spring Washer	2		
5	590198520080		Gasket	3		
6	590798520118		Steel Bushing	2		
7	590798520025		Brush Lifting Bracket	1		
8	590198520180		Pin	2		
9	590798520045		Pin Shaft	1		
10	590198520065		Nut M10	6		
11	590798520120		Screw M10	6		
12	590798520123		Cap	2		
13	590198520132		Knob	2		
14	590198520150		Screw M8x35	2		
15	590198520017		Nylon Bush	6		
16	590798520024		Linkage	2		
17	590398520085		Gasket	4		
18	590198520145		Screw M8x30	2		
19	590198520028		Nylon Washer	6		
20	590198520091		Screw M5x12	4		
21	590198520095		Ribbon Base	2		
22	590498520031		Fixed Plate	1		
23	590198520066		Nut M8	2		
24	590198520109		Gasket	2		
25	590798520121		Steel Bushing	2		
26	591398520021		Push Motor	1		
27	590798520046		Pin Shaft	1		
28	590798520015		Brush Disk Cover	1		For NR1060
28	590798520078		Brush Cap	1		For NR860P
29	590198520045		Locator Plate	2		

04 Brush System (590746021503) Continuation

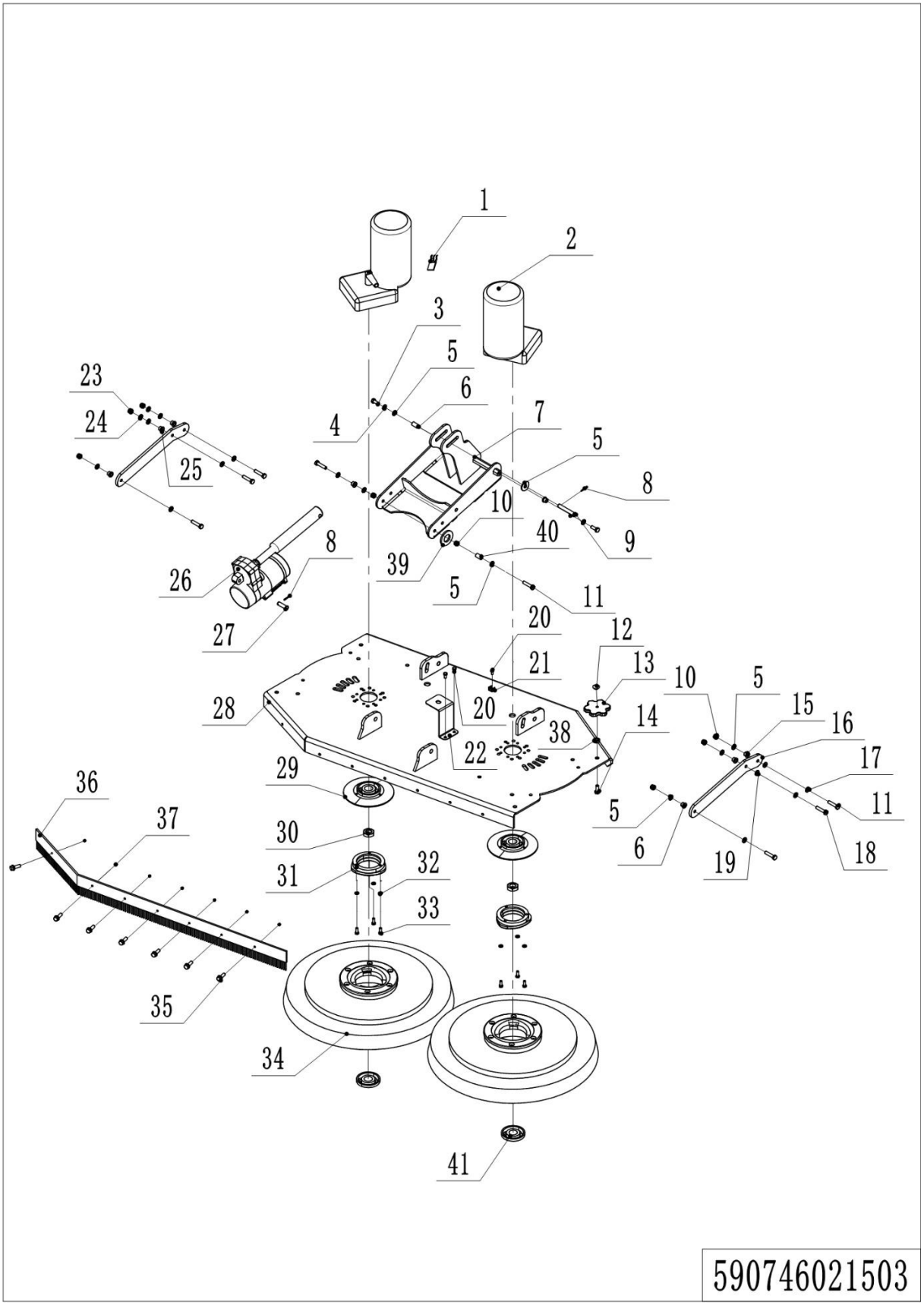

04 Brush System (590746021503) Continuation

No.	Item Code	Mark	Item Description	Qty.	Substitute	Note
30	590398520064		Nut M20	2		
31	590198520010		Brush Buckle	2		
32	590198520075		Spring Washer	6		
33	590198520087		Screw M6x20	6		
34	590398520092		19” Brush	2		For NR1060
34	590398520093		19” Needle Disk	2		For NR1060
34	590798520110		19” Brush (Soft)	2		NR1060 PTIONAL
34	590798520111		19” Brush (Hard)	2		NR1060 PTIONAL
34	590798520074		16” Brush	2		For NR860
34	590798520075		16” Needle Disk	2		For NR860P
34	590798520112		16” Brush (Soft)	2		NR860P OPTIONAL
34	590798520113		16” Brush (Hard)	2		NR860P OPTIONAL
35	590198520142		Screw M6x16	15		
36	590798520002		Brush Strip	1		For NR1060
36	590798520077		Brush Strip	1		For NR860P
37	590198520067		Nut M6	7		
38	590198520122		Nut M8	2		
39	590798520128		Steel Bushing	2		
40	590398520053		Gasket	2		
41	590198520206		Brush Buckle	2		
41	590198520220		Positioning Buckle	2		

05 Squeegee System (590746021504)

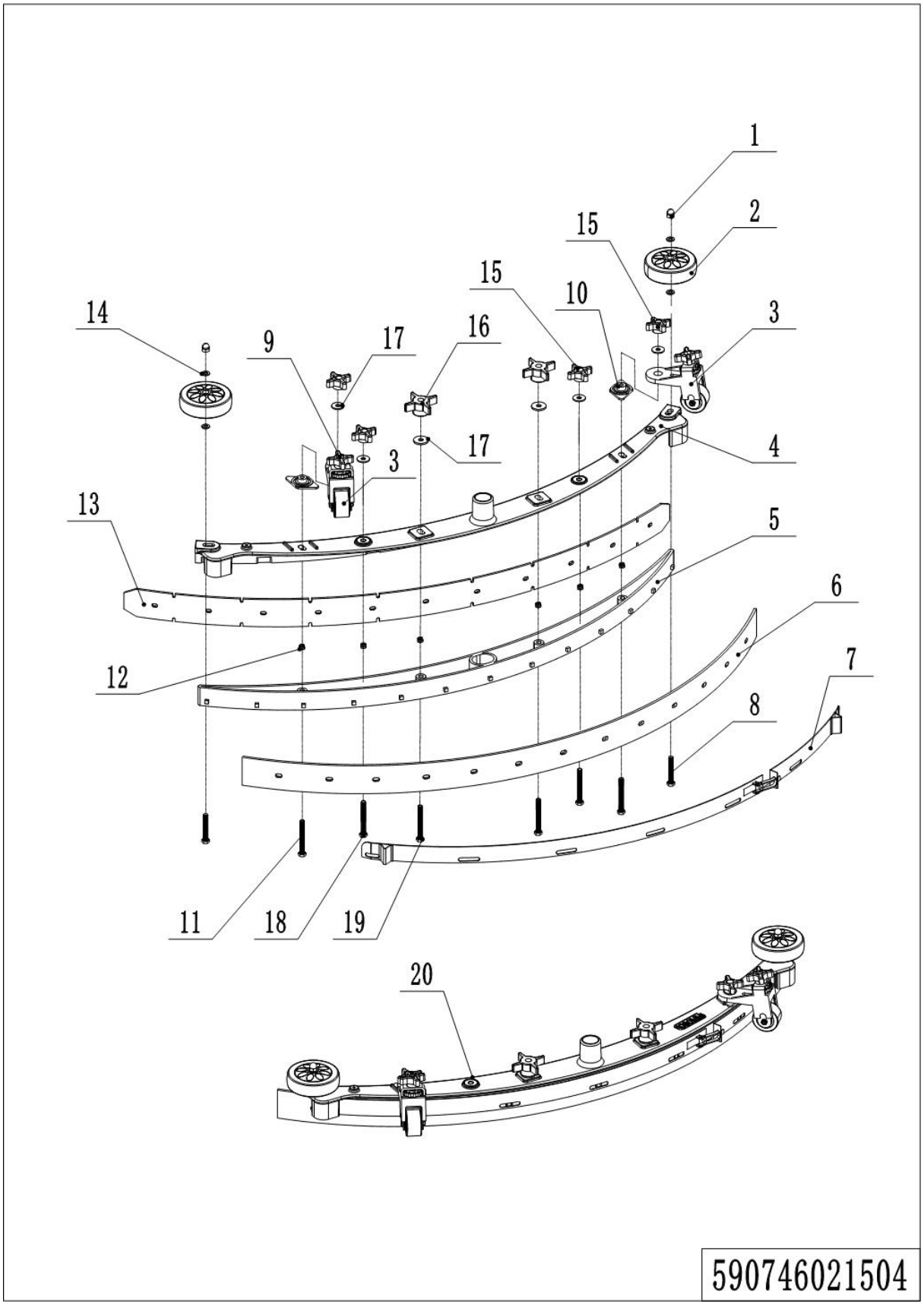

05 Squeegee System（590746021504）

No.	Item Code	Mark	Item Description	Qty.	Substitute	Note
1	590398520062		Nut M8	2		
2	590798520060		Bumper Wheel	2		
3	590798520265		Wheel	2		
4	590798520063		Squeegee	1		
5	590798520065		Baseplate	1		
6	590798520066		Rear Blade	1		
6	590798520114		Rear Blade (NR)	1		OPTIONAL
6	590798520115		Rear Blade (PU)	1		OPTIONAL
7	590798520068		Batten	1		
8	590798520064		Screw M8x45	2		
9	590798520061		Knob	2		
10	590798520170		Spacer Bush(Right)	1		
10	590798520171		Spacer Bush(Left)	1		
11	590798520276		Screw M8x80	2		
12	590198520122		Nut M8	6		
13	590798520067		Front Blade	1		
13	590798520116		Front Blade (NR)	1		OPTIONAL
13	590798520117		Front Blade (PU)	1		OPTIONAL
14	590198520117		Washer	4		
15	590798520073		Knob	4		
16	590798520072		Knob	2		
17	590398520002		Gasket	6		
18	590798520070		Screw M8x60	2		
19	590798520069		Screw M8x75	2		
20	590798510024		Squeegee Kits	1		Without Blade

06 Retaining Edge (590746021505)

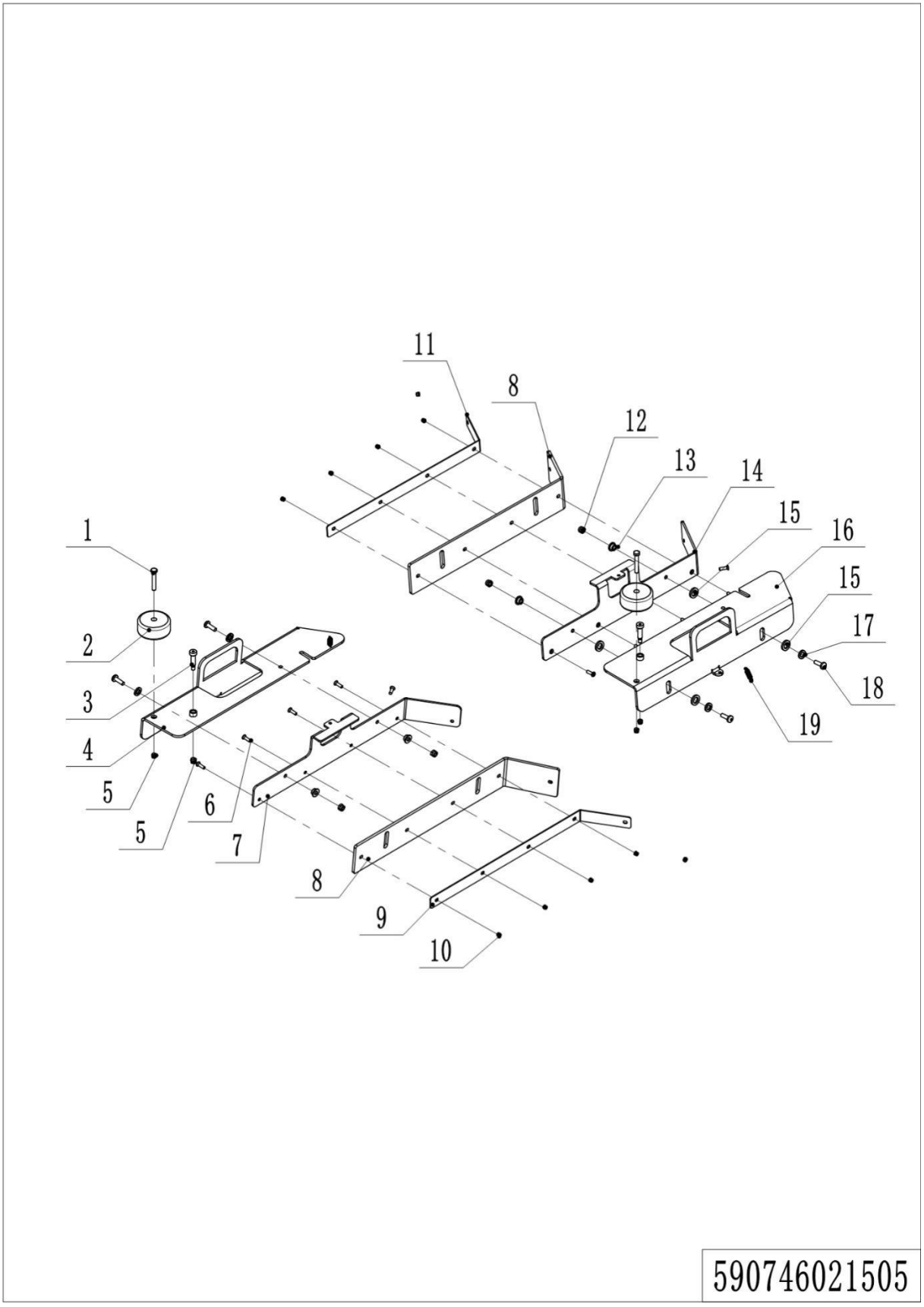

06 Retaining Edge（590746021505）

No.	Item Code	Mark	Item Description	Qty.	Substitute	Note
1	590798520054		Screw M10x55	2		
2	590798520013		Bumper Wheel	2		
3	590798520044		Screw M12x25	2		
4	590798520018		Wing (Right)	1		For NR1060
4	590798520080		Wing (Right)	1		For NR860P
5	590198520065		Nut M10	2		
6	590198520143		Screw M6x20	6		
7	590798520020		Fixed Plate	1		For NR1060
7	590798520082		Fixed Plate	1		For NR860P
8	590798520001		Rubber Strip	2		For NR1060
8	590798520076		Rubber Strip	2		For NR860P
9	590798520129		Right Batten	2		For NR1060
9	590798520130		Right Batten	2		For NR860P
10	590198520067		Nut M6	10		
11	590798520021		Left Batten	2		For NR1060
11	590798520083		Left Batten	2		For NR860P
12	590198520066		Nut M8	4		
13	590798520121		Steel Bushing	4		
14	590798520019		Fixed Plate	1		For NR1060
14	590798520081		Fixed Plate	1		For NR860P
15	590198520028		Nylon Washer	8		
16	590798520017		Wing (Left)	1		For NR1060
16	590798520079		Wing (Left)	1		For NR860P
17	590198520109		Gasket	4		
18	590198520100		Screw M8x25	4		
19	590798520043		Tension Spring	2		

07 Solution Assembly (590746021506)

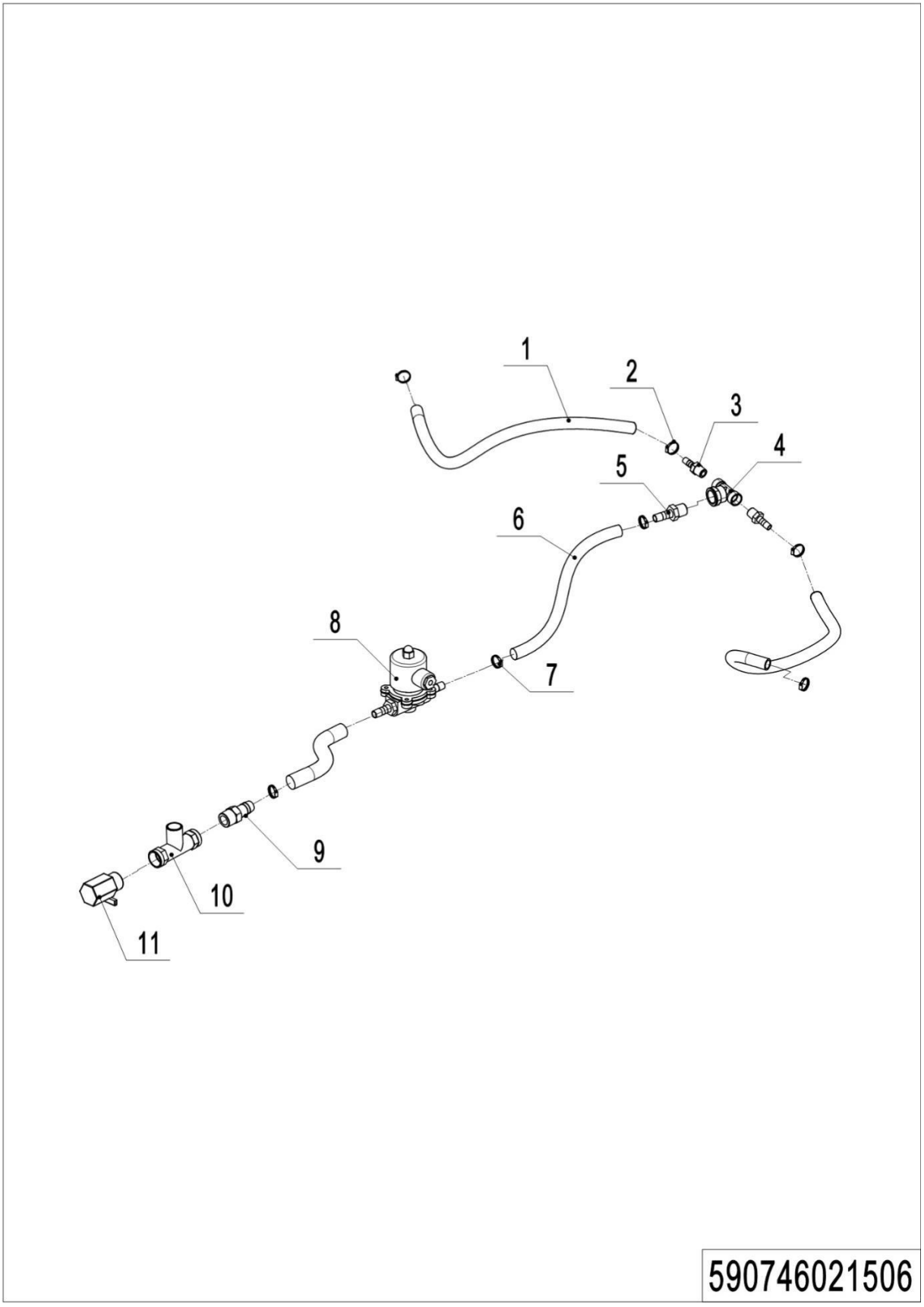

1= Supply as package. 2= Supply with constraints. 3= Phasing-out supply. 4= Supply as assembly. 5= Check other tables.

07 Solution Assembly（590746021506）

No.	Item Code	Mark	Item Description	Qty.	Substitute	Note
1	590798520262		Water Pipe	1		0.84m
2	590198520096		Hoop	4		
3	590498520200		Connectors	2		
4	590498520135		T-connector	1		
5	590498520018		Connectors	1		
6	590798520215		Water Pipe	1		0.81m, NR860P
6	590798520216		Water Pipe	1		0.69m, NR1060
7	590498520076		Hoop	4		
8	590498510007		Solenoid Valve	1		
9	590498520144		Connectors	1		
10	590798520122		T-connector	1		
11	590498520080		Valve	1		

08 Wiper Frame (590746017002)

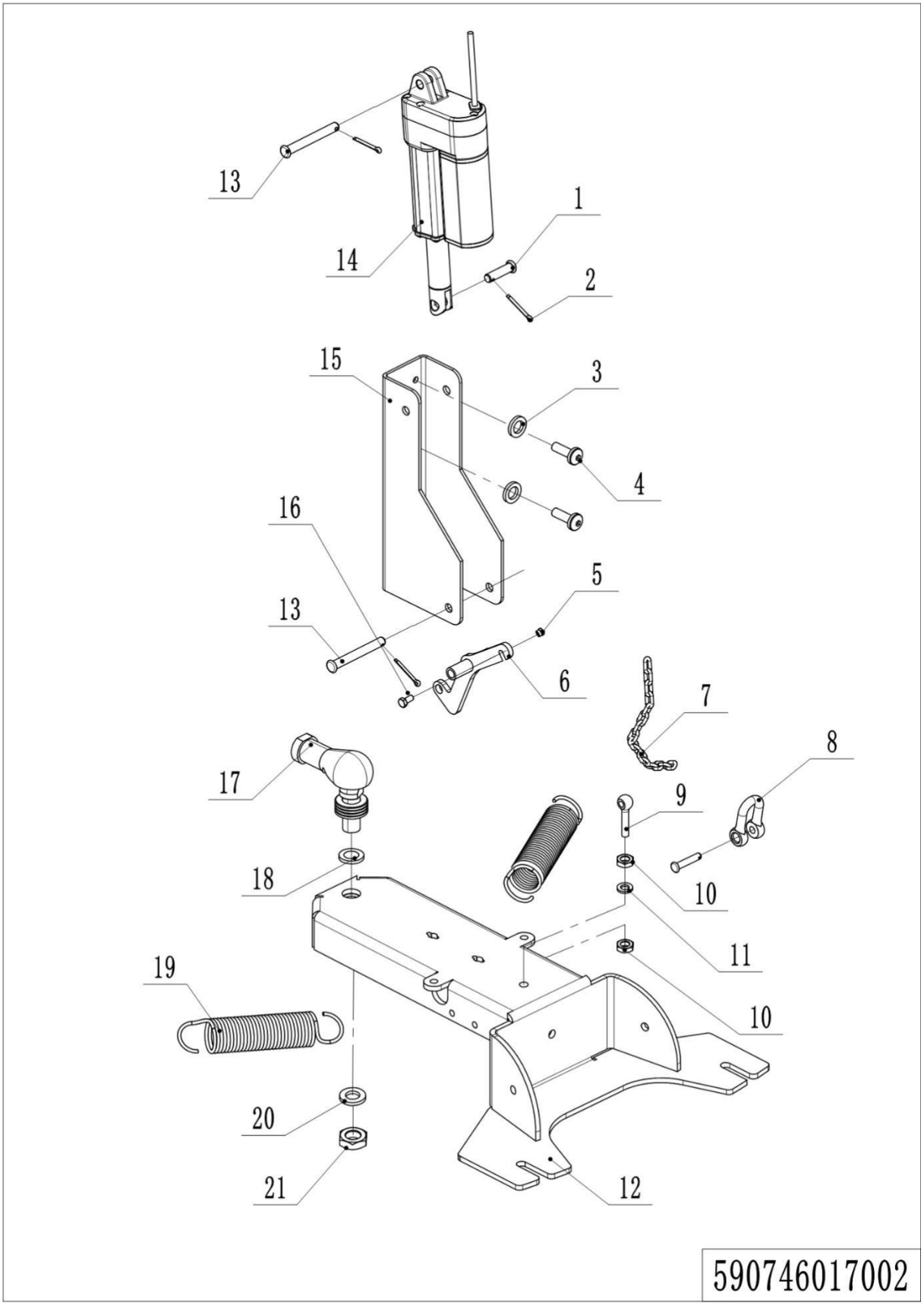

08 Wiper Frame（590746017002）

No.	Item Code	Mark	Item Description	Qty.	Substitute	Note
1	590798520056		Pin Shaft	1		
2	590198520180		Pin	4		
3	590398520051		Gasket	2		
4	590398520048		Screw M6x20	2		
5	590198520067		Nut M6	1		
6	590798520034		Push Rod Linkage	1		
7	590498520128		Chain	1		0.3m
8	590498520121		Shackle	1		
9	590398520089		Screw M8x45	1		
10	590198520122		Nut M8	2		
11	590198520074		Spring Washer	1		
12	590798520023		Fixed Bracket	1		
13	590498520068		Pin Shaft	2		
14	590798510002		Push Motor	1		
15	590798520027		Fixed Sheet Metal	1		
16	590198520084		Screw M6x20	1		
17	590398520066		Universal Joint	1		
18	590398520053		Gasket	6		
19	590798520047		Tension Spring	2		
20	590398520086		Spring Washer	2		
21	590398520063		Nut M16	1		

09 Front Body (590746021507)

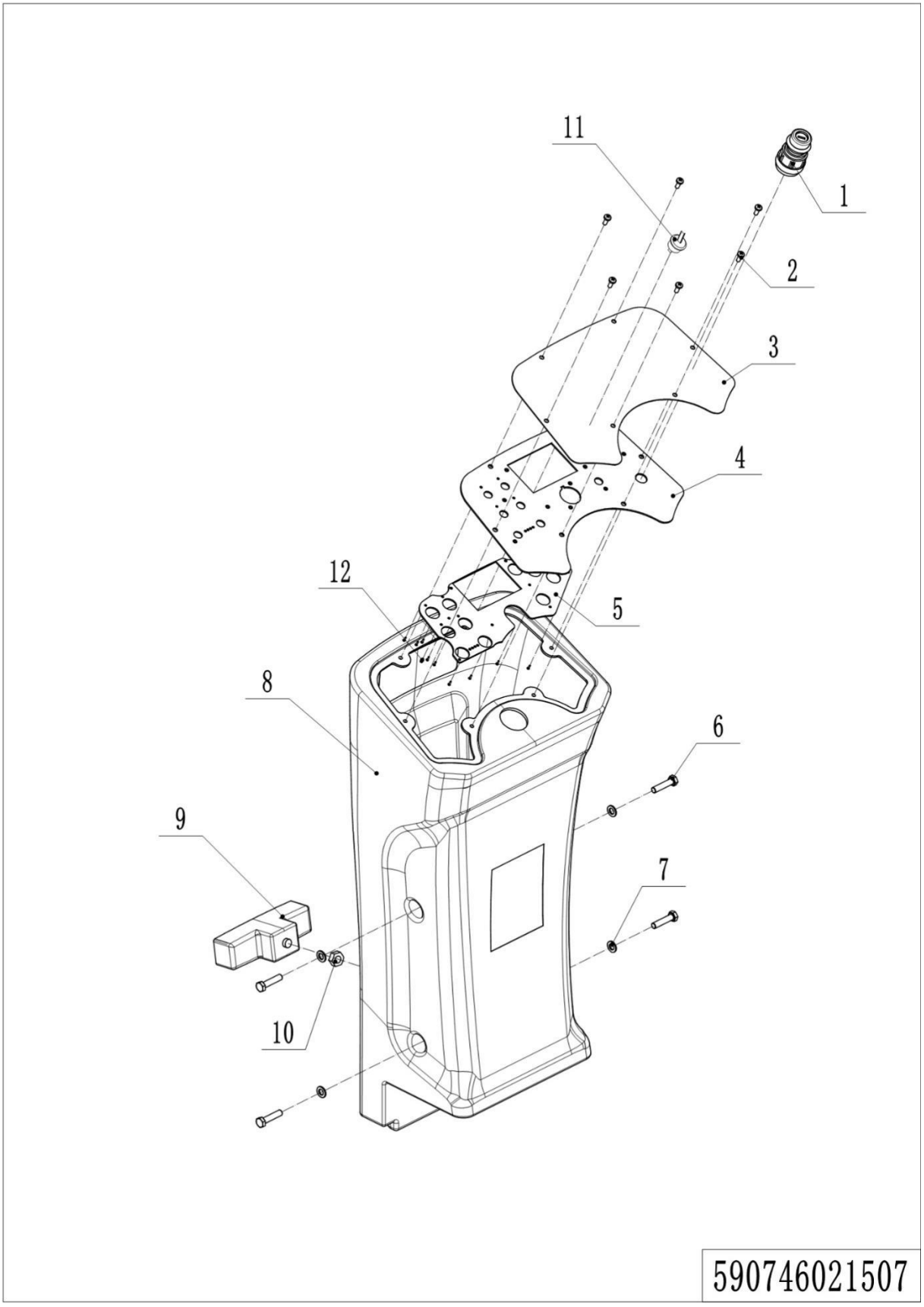

09 Front Body（590746021507）

No.	Item Code	Mark	Item Description	Qty.	Substitute	Note
1	590798510015		Electronic Lock	1		
1	590398520111		Key Switch	1		For Li-battery
2	590198520091		Screw M5x12	6		
3	590798520000		Label	1		
4	590798520035		Mounting Plate	1		
4	590798520149		Mounting Plate	1		For Li-battery
5	590798510011		PCB	1		
5	590798520271		PCB	1		For Li-battery
6	590498520130		Screw M8x35	4		
7	590198520109		Gasket	4		
8	590798520011		Front Cover	1		
9	590398510009		Front Light	1		
10	590198520122		Nut M8	1		
11	590198520231		Switch	1		For Li-battery
12	591398520028		Screw M3x8	11		

Chapter 3：Electrical parts

01 Electronic Control Components (590746033001)

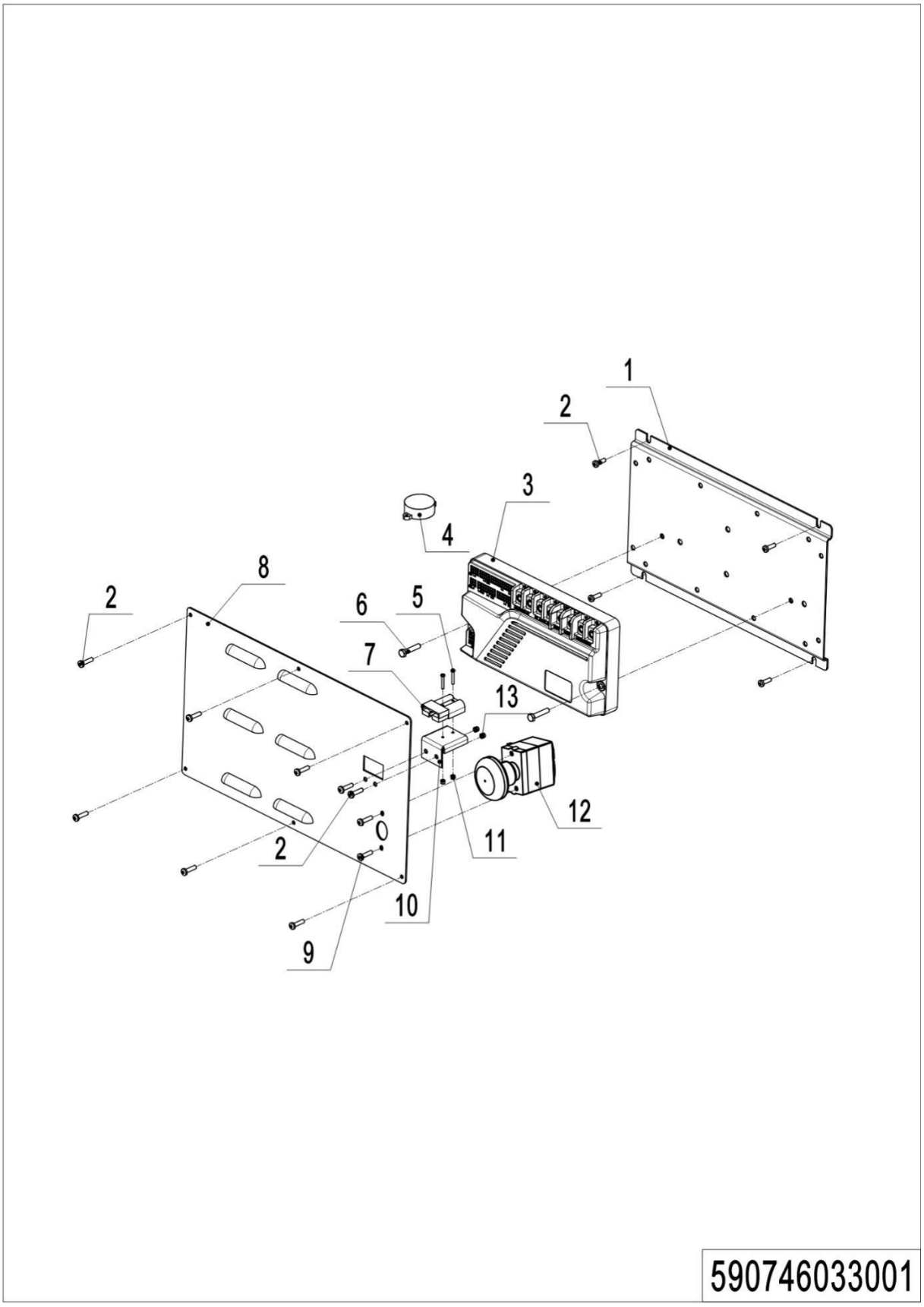

01 Electronic Control Components (590746033001)

No.	Item Code	Mark	Item Description	Qty.	Substitute	Note
1	590798520131		Fixed Plate	1		
2	590198520093		Screw M5x12	6		
3	590798510010		Controller	1		
3	590798520272		Controller	1		For Li-battery
4	590398520091		Buzzer	1		
5	590398520078		Screw M3x20	4		
6	590198520085		Screw M6x30	2		
7	590198520219		Microswitch	1		
8	590798510007		Charging Plug	1		
9	590798520132		Electrical Close Plate	1		
9	590798520274		Electrical Close Plate	1		For Li-battery
10	590198520191		Screw M5x8	8		
11	590398520032		Fixed Sheet Metal	1		
11	590198520228		Fixed Plate	1		For Li-battery
12	590198520102		Nut M3	2		
13	590798510013		Emergency Switch	1		
14	590198520068		Nut M5	2		

02 Traction Battery (590746037001)

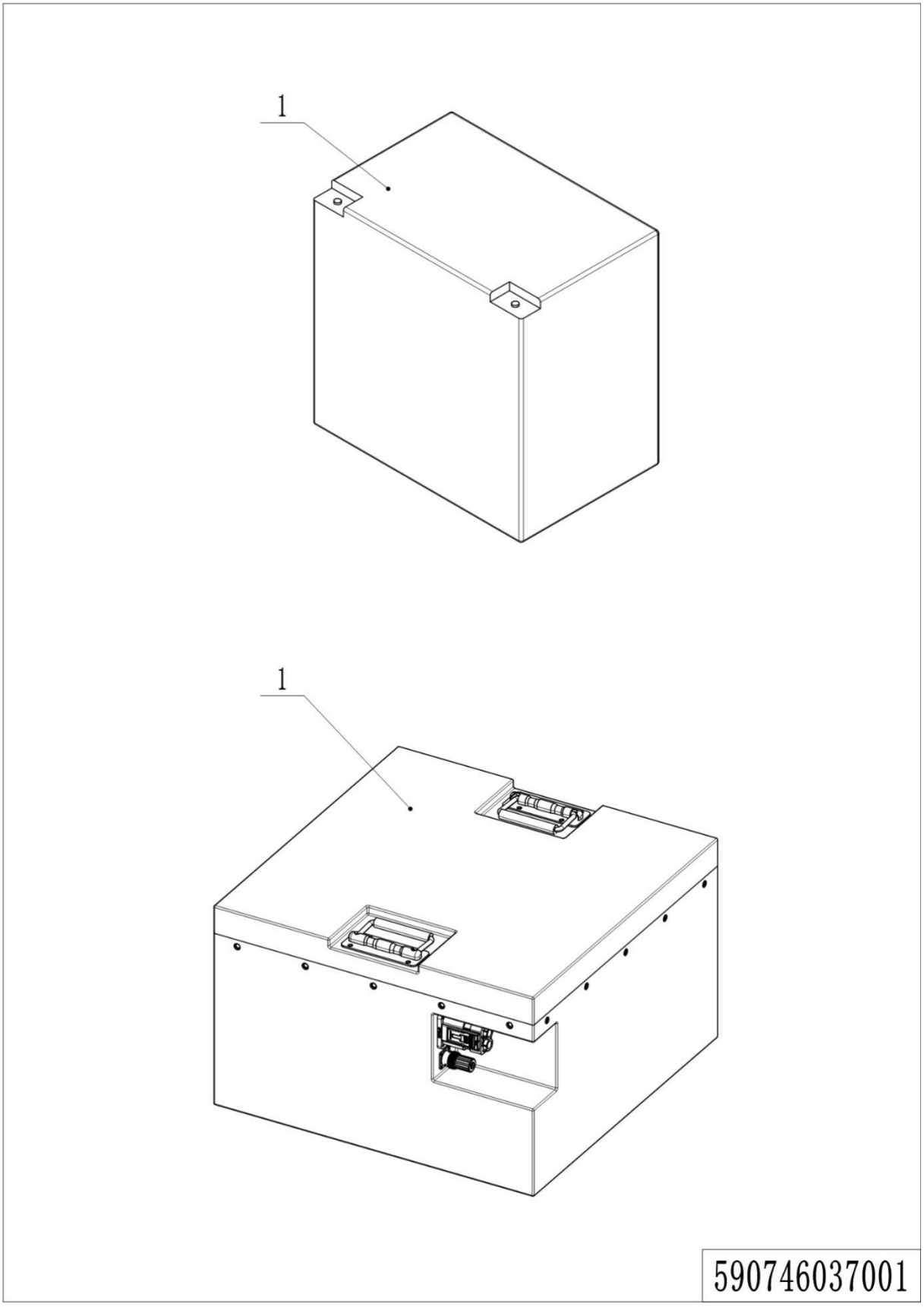

02 Traction Battery (590746037001）

No.	Item Code	Mark	Item Description	Qty.	Substitute	Note
1	590798520100		Battery 6V200AH	6		
1	591398520036		Battery 12V150AH	3		NR860P
1	920600100758		Li-Battery 38.4V205Ah	1		For Li-battery

03 Charger (590746036501)

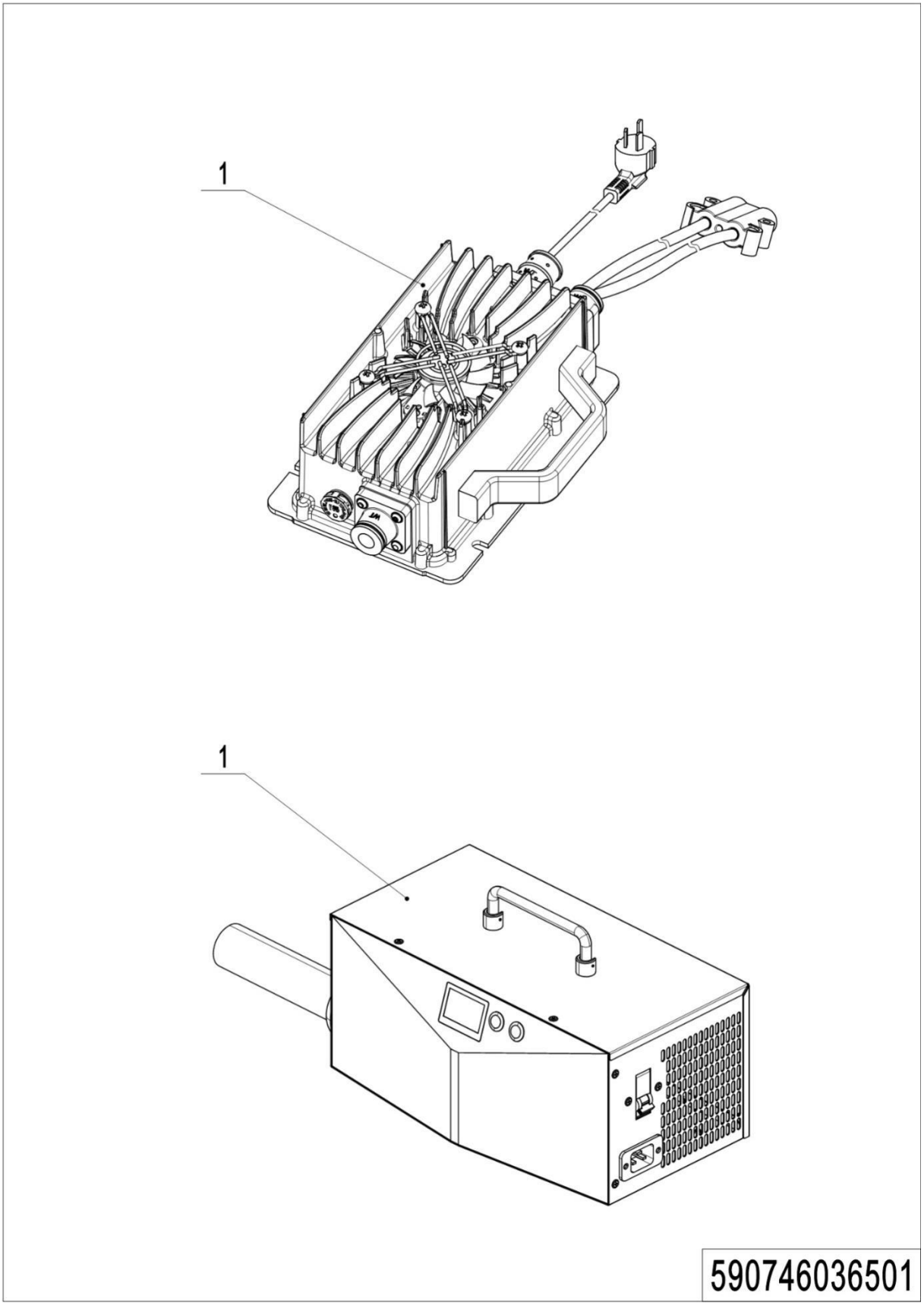

1= Supply as package. 2= Supply with constraints. 3= Phasing-out supply. 4= Supply as assembly. 5= Check other tables.

03 Charger (590746036501）

No.	Item Code	Mark	Item Description	Qty.	Substitute	Note
1	590798520101		Charger 36V25A(Asia)	1		
1	590798520102		Charger 36V25A(ENG)	1		
1	590798520103		Charger 36V25A(USA)	1		
1	590798520104		Charger 36V25A(EU)	1		
1	590798520105		Charger 36V25A(AUS)	1		
1	590798520106		Charger 36V25A(ITA)	1		
1	590798520107		Charger 36V25A(CH)	1		
1	590798520108		Charger 36V25A(ISR)	1		
1	590798520109		Charger 36V25A(BRA)	1		
1	590798520268		Charger 36V25A(USA)	1		With CSA and UL certifications
1	921000201223		Li-Charger 36V25A(Asia)	1		Single-phase100-240V
1	921000201170		Li-Charger 36V25A(USA)	1		Single-phase100-240V
1	921000201172		Li-Charger 36V25A(EU)	1		Single-phase100-240V
1	921000201224		Li-Charger 36V25A(ENG)	1		Single-phase100-240V
1	921000201225		Li-Charger 36V25A(AUS)	1		Single-phase100-240V
1	921000201226		Li-Charger 36V25A(ITA)	1		Single-phase100-240V
1	921000201227		Li-Charger 36V25A(CH)	1		Single-phase100-240V
1	921000201228		Li-Charger 36V25A(ISR)	1		Single-phase100-240V
1	921000201229		Li-Charger 36V25A(BRA)	1		Single-phase100-240V
1	921000201157		Li-Charger 36V60A(Asia)	1		Single-phase220V
1	921000201142		Li-Charger 36V30A(USA)	1		Single-phase110V
1	921000201158		Li-Charger 36V60A(AUS)	1		Single-phase220V
1	921000201159		Li-Charger 36V60A(ENG)	1		Single-phase220V
1	921000201161		Li-Charger 36V60A(ITA)	1		Single-phase220V
1	921000201162		Li-Charger 36V60A(CH)	1		Single-phase220V
1	921000201163		Li-Charger 36V60A(ISR)	1		Single-phase220V
1	921000201164		Li-Charger 36V60A(BRA)	1		Single-phase220V

04 Wire Harness (Lead-acid battery) (590746033002)

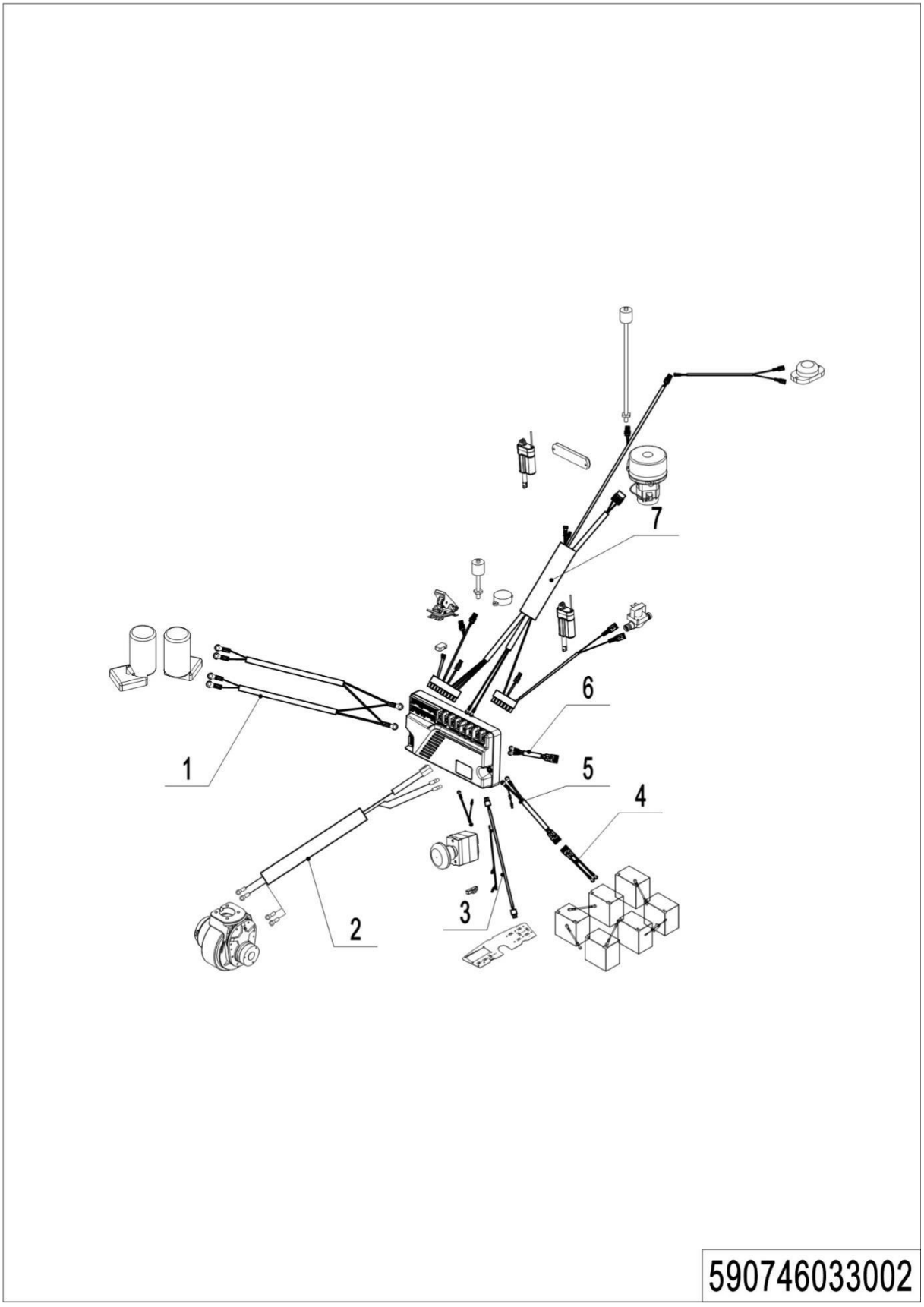

1= Supply as package. 2= Supply with constraints. 3= Phasing-out supply. 4= Supply as assembly. 5= Check other tables.

04 Wire Harness (Lead-acid battery) (590746033002）

No.	Item Code	Mark	Item Description	Qty.	Substitute	Note
1	590798510016		Wire Harness	1		
2	590798510017		Wire Harness	1		
3	590798510018		Wire Harness	1		
4	590798510019		Wire Harness	1		
5	590798510020		Wire Harness	1		
6	590798510021		Wire Harness	1		
7	590798510022		Wire Harness	1		

05 Wire Harness (Lithium battery) (590746033003)

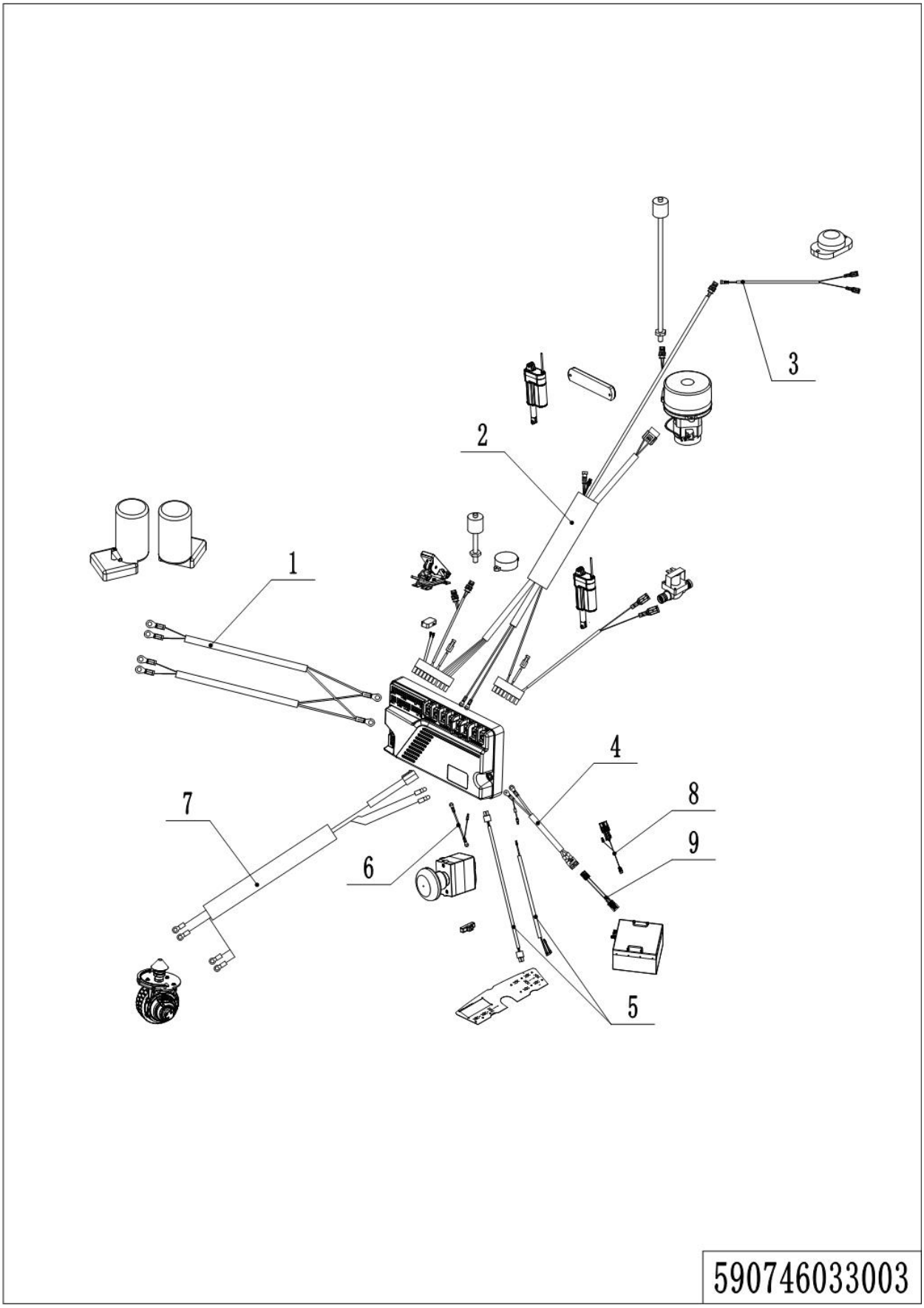

1= Supply as package. 2= Supply with constraints. 3= Phasing-out supply. 4= Supply as assembly. 5= Check other tables.

05 Wire Harness (Lithium battery) (590746033003）

No.	Item Code	Mark	Item Description	Qty.	Substitute	Note
1	590798510016		Wire Harness	1		For Li-battery
2	590798520266		Wire Harness	1		For Li-battery
3	590798520156		Wire Harness	1		For Li-battery
4	590798520168		Wire Harness	1		For Li-battery
5	590798520167		Wire Harness	1		For Li-battery
6	590798520144		Connection Wire	1		For Li-battery
7	590798510017		Wire Harness	1		For Li-battery
8	590798520273		Wire Harness	1		For Li-battery
9	590798520169		Battery Cable	1		For Li-battery

Chapter 4: Others

01 Labels and Decals (590746047001)

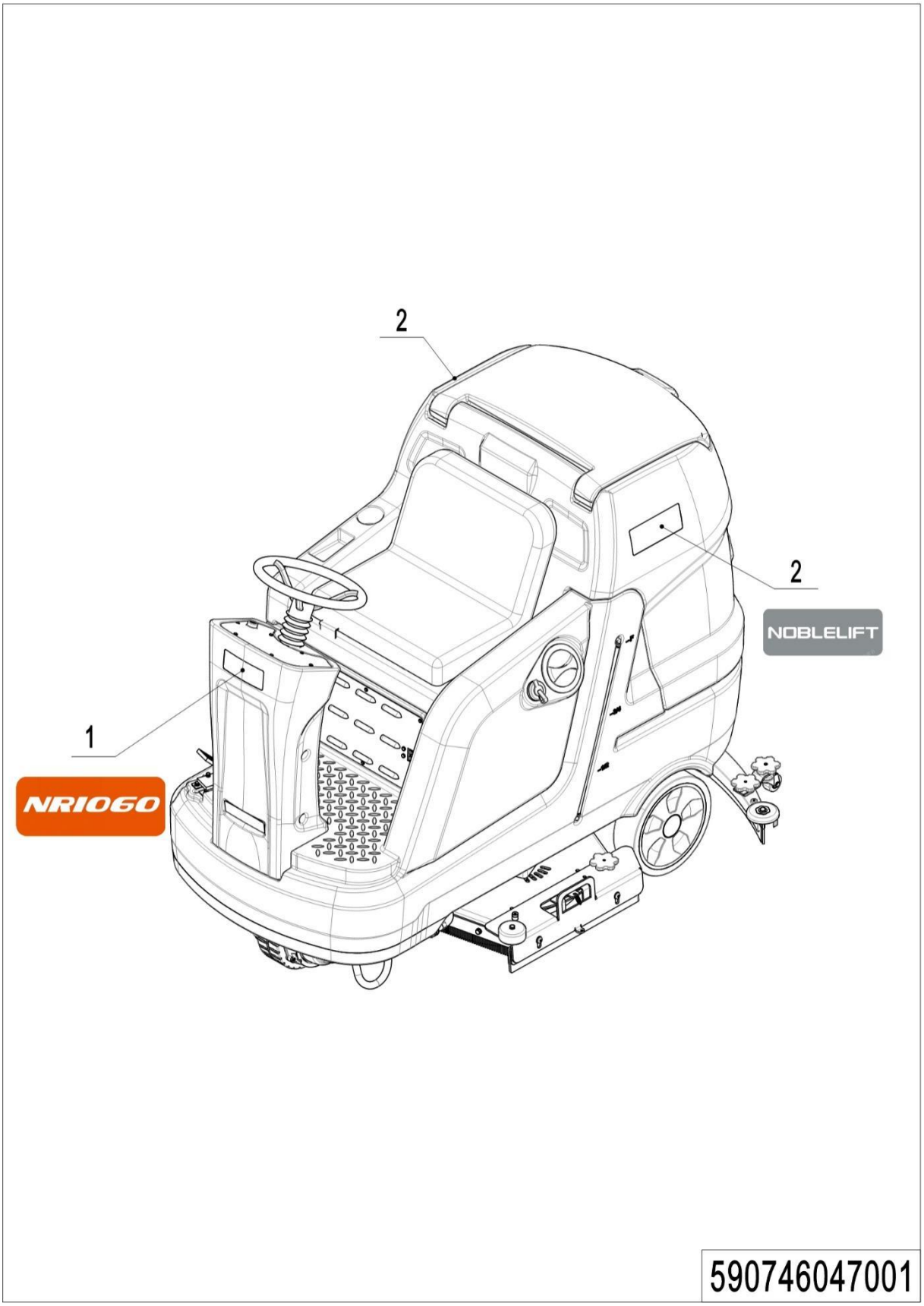

01 Labels and Decals (590746047001)

No.	Item Code	Mark	Item Description	Qty.	Substitute	Note
1	590747020001		Label (NR1060)	1		
2	590447020000		Label (NOBLELIFT)	2		

02 Labels and Decals (590746047002)

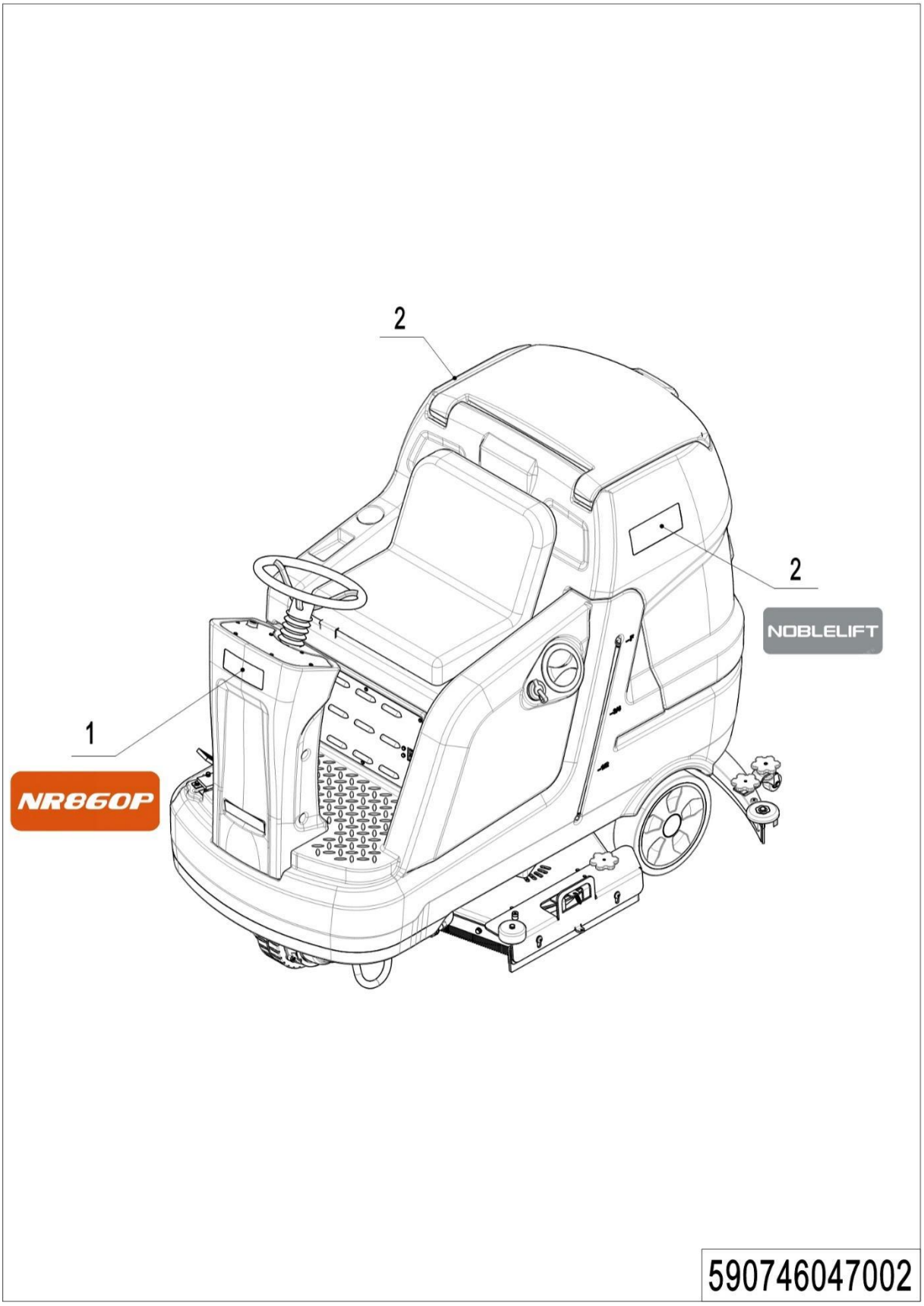

02 Labels and Decals (590746047001)

No.	Item Code	Mark	Item Description	Qty.	Substitute	Note
1	590747020002		Label (NR860P)	1		
2	590447020000		Label (NOBLELIFT)	2		

Appendix

01 Electrical Circuit Diagram (Lead-acid battery) (590746045501)

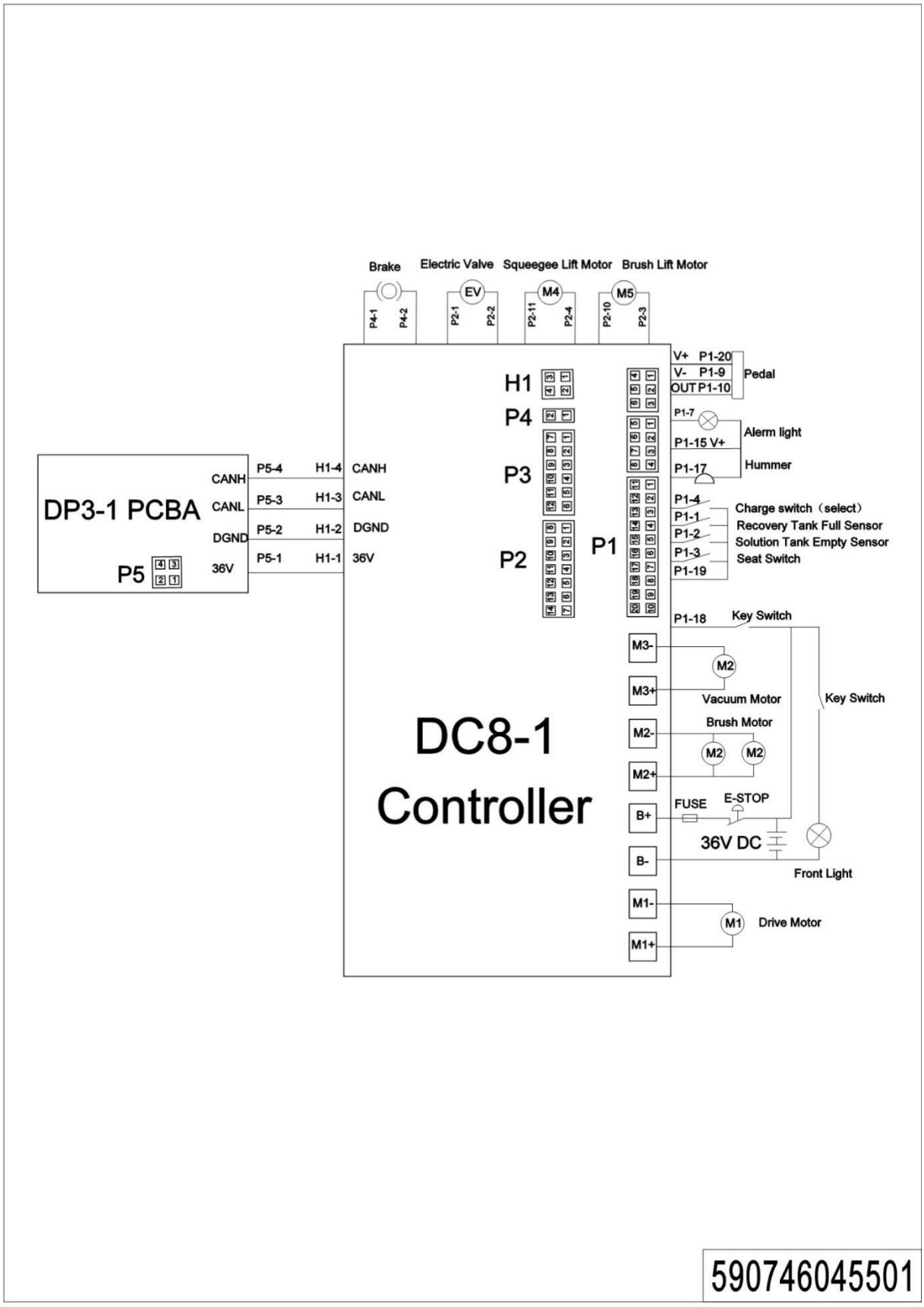

02 Electrical Circuit Diagram (Lithium battery) (590746045502)

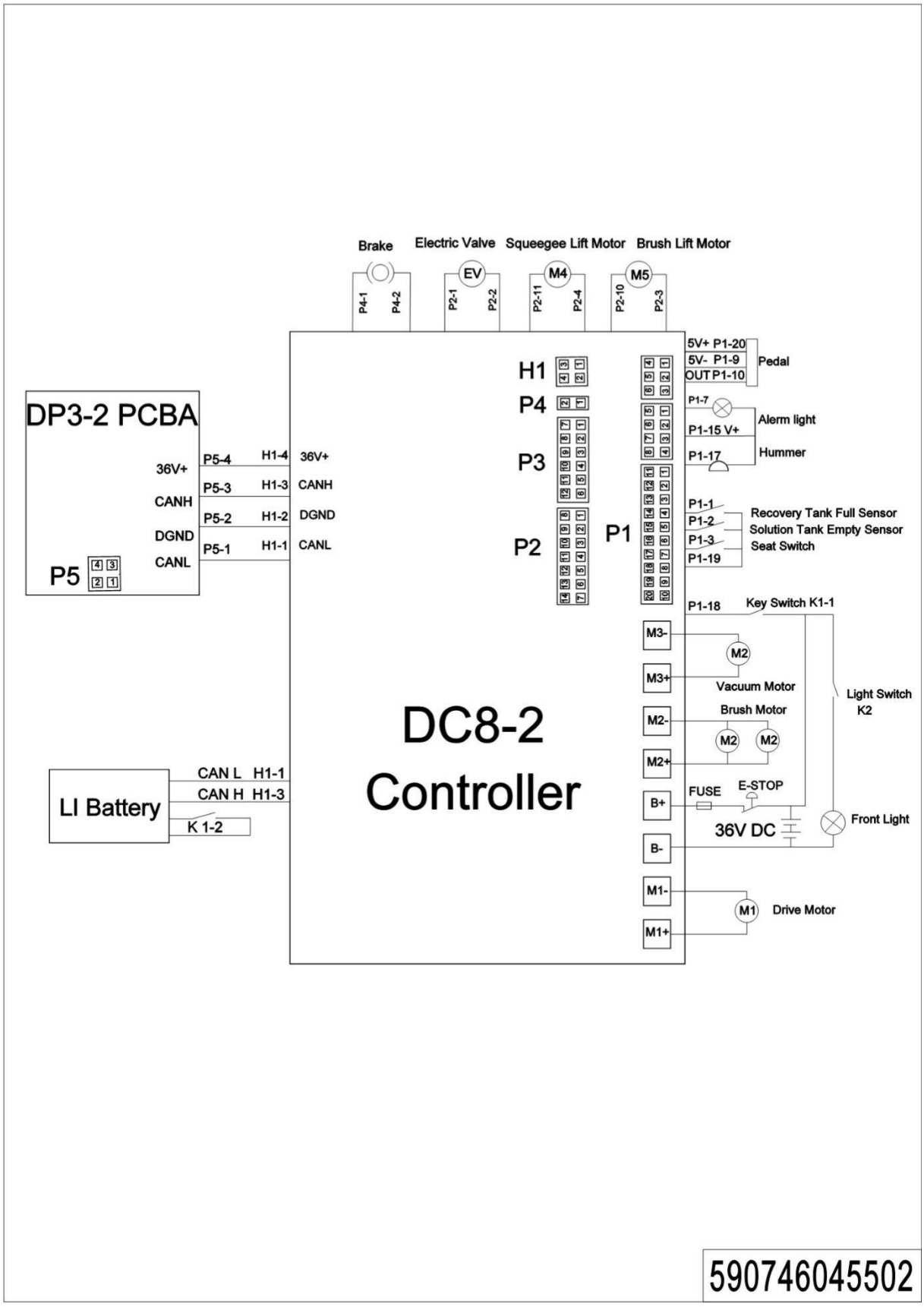

03 Easy Wornout Parts List

No.	Item Code	Item Description	Qty.	Chapter/ Section/ Number
1	590798510004	Accelerator	1	Chapter 2/01/02
2	590798520004	Filter	1	Chapter 2/01/09
3	590398510010	Warning Light	1	Chapter 2/01/17
4	590198520061	Sealing Strip	1.7m	Chapter 2/02/02
5	590798520041	Drain Hose	1	Chapter 2/02/06
6	590798520042	Suction Pipe	1	Chapter 2/02/08
7	590798520038	Seat	1	Chapter 2/02/16
8	590798510012	Seat Switch	1	Chapter 2/02/17
9	590798510003	Vacuum Motor	1	Chapter 2/02/22
10	590798520039	Steering Wheel	1	Chapter 2/03/01
11	590798510005	Brush Motor	2	Chapter 2/04/02
12	590798510001	Push Motor	1	Chapter 2/04/26
13	590798520060	Bumper Wheel	2	Chapter 2/05/02
14	590798520265	Rear Wheel	2	Chapter 2/05/03
15	590798510024	Squeegee Kits	1	Chapter 2/05/20
16	590798520013	Bumper Wheel	2	Chapter 2/06/02
17	590798520001	Rubber Strip	2	Chapter 2/06/08
18	590798520076	Rubber Strip	2	Chapter 2/06/08
19	590498510007	Solenoid Valve	1	Chapter 2/07/08
20	590798510002	Push Motor	1	Chapter 2/08/14
21	590798510015	Electronic Lock	1	Chapter 2/09/01
22	590398510009	Front Light	1	Chapter 2/09/09
23	590798510013	Emergency Switch	1	Chapter 3/01/13

04 Consumable Parts List

No.	Item Code	Item Description	Qty.	Chapter/ Section/ Number
1	590398520092	19” Brush	2	Chapter 2/04/34
	590398520093	19” Needle Disk	2	Chapter 2/04/34
	590798520110	19” Brush (Soft)	2	Chapter 2/04/34
	590798520111	19” Brush (Hard)	2	Chapter 2/04/34
	590798520074	16” Brush	2	Chapter 2/04/34
	590798520075	16” Needle Disk	2	Chapter 2/04/34
	590798520112	16” Brush (Soft)	2	Chapter 2/04/34
	590798520113	16” Brush (Hard)	2	Chapter 2/04/34
2	590798520066	Rear Blade	1	Chapter 2/05/06
	590798520114	Rear Blade (NR)	1	Chapter 2/05/06
	590798520115	Rear Blade (PU)	1	Chapter 2/05/06
3	590798520067	Front Blade	1	Chapter 2/05/13
	590798520116	Front Blade (NR)	1	Chapter 2/05/13
	590798520117	Front Blade (PU)	1	Chapter 2/05/13
4	590798520001	Rubber Strip		Chapter 2/06/08
	590798520076	Rubber Strip		Chapter 2/06/08

1= Supply as package. 2= Supply with constraints. 3= Phasing-out supply. 4= Supply as assembly. 5= Check other tables.