## 256698501001驱动系统/Drive system

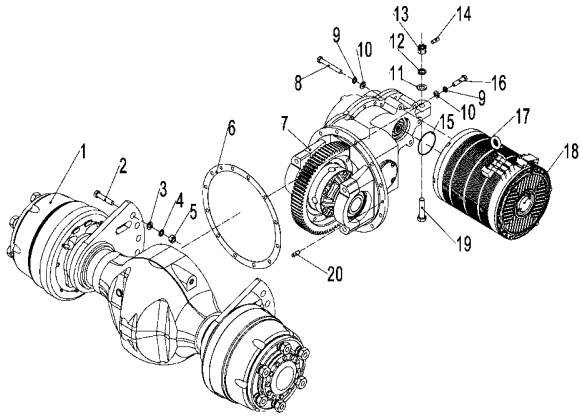


| 序号/NO | 编码/SN | 名称 | Name | 数量/QTY | 备注/Remark |
|---|---|---|---|---|---|
| 1 | 256513510001 | 驱动桥 | Drive axle | 1 | |
| 2 | 910100300090 | 螺栓GB5783-M24x80-8.8 | Bolt GB5783 M24x80-8.8 | 12 | |
| 3 | 910400100014 | 平垫圈GB97.1-24-200HV | Flat washer GB97.1-24-200 hv | 12 | |
| 4 | 910400500013 | 弹簧垫圈GB93-24 | Spring washer gb93-24 | 12 | |
| 5 | 910300100018 | 螺母GB6170-M24-10 | Nut GB6170 m2-m24-10 | 12 | |
| 6 | 256513520001 | 密封垫φ428Xφ372X1 | Gasket phi phi 428 x 372 x1 | 1 | |
| 7 | 256514010003 | 变速箱 | Gearbox | 1 | |
| 8 | 910100200019 | 螺栓GB5785-M14x1.5x130-10.9 | Bolt GB5785 - M14x1. 5 x130-10.9 | 5 | |
| 9 | 910400500009 | 弹簧垫圈GB93-14 | Spring washer gb93-14 | 17 | |
| 10 | 910400100009 | 平垫圈GB97.1-14-200HV | The flat washer GB97.1-14-200 hv | 17 | |
| 11 | 910400100012 | 平垫圈GB97.1-20-200HV | Flat washer GB97.1-20-200 hv | 1 | |
| 12 | 910400500012 | 弹簧垫圈GB93-20 | Spring washer gb93-20 | 1 | |
| 13 | 910300900002 | 螺母GB6178-M20-8 | Nut GB6178 M20-8 | 1 | |
| 14 | 910600600037 | 开口销GB91-4x40 | Cotter pin x40 GB91-4 | 1 | |
| 15 | 910800100078 | O形圈-外95x3.1 | O - outer 95x3.1 | 1 | |
| 16 | 910100400022 | 螺栓GB5786-M14x1.5x40-8.8 | Bolt GB5786 - M14x1. 5 x40-8.8 | 12 | |
| 17 | 256632010003 | 电机(交流) | Motor (AC) | 1 | |
| 18 | 255098513251 | 传感器 (HP) | Sensor(HP) | 1 | |
| 19 | 910100500006 | 螺栓GB31.1-M20x90-8.8 | Bolt GB31.1 M20x90-8.8 | 1 | |
| 20 | 910600100041 | 圆柱销GB119.2-12x25 | The cylindrical pin GB119.2-12 x25 | 1 | |



## 256698501002驱动桥/Drive axle

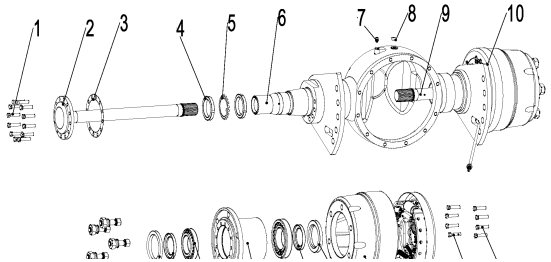


| 序号/NO | 编码/SN | 名称 | Name | 数量/QTY | 备注/Remark |
|---|---|---|---|---|---|
| A | 256513510001 | 驱动桥 | Drive axle | 1 | 包括1-24 |
| 1 | 256598513501 | 半轴螺栓24453-02061B | Half shaft bolt | 24 | |
| 2 | 256598513502 | 左半轴KJ073-10003 | Left half shaft | 1 | |
| 3 | 256598513503 | 密封垫23746-02081 | Gasket | 2 | |
| 4 | 256598513504 | 圆螺母M80X2(A32C3-02021) | Round nut M80X2 | 4 | |
| 5 | 256598513505 | 止动垫圈80(A32C3-02031) | Stop washer 80 | 2 | |
| 6 | 256598513506 | 桥壳总成Q04A4-20105 | Bridge shell assembly | 1 | |
| 7 | 256598513507 | 通气塞90106-65690 | Air plug | 1 | |
| 8 | 256598513508 | 堵塞22193-03001 | Jam | 3 | |
| 9 | 256598513509 | 右半轴KJ073-10002 | Right half shaft | 1 | |
| 10 | 256598513510 | 右制动器总成/1970(HRA01C3701-70011) | Right brake assembly /1970 | 1 | |
| 11 | 256598513511 | 轮毂螺母23913-02041B | Wheel hub nut | 12 | |
| 12 | 256598513512 | 螺栓柱A01C3-02021B | Bolt column | 12 | |

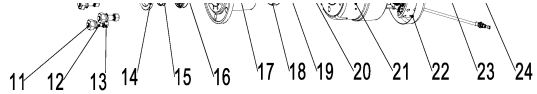


| | | | | | |
|---|---|---|---|---|---|
| 13 | 256598513513 | 螺母M20X1.5(B4223-00020B) | Nut M20X1. 5 | 12 | |
| 14 | 256598513514 | 垫圈φ80Xφ110X13(4CC11-00-10) | Gasket phi phi 80 x 110 x13 | 2 | |
| 15 | 256598513515 | 油封φ110Xφ140X12(Z6650-11004) | Oil seal phi phi 110 x 140 x12 | 2 | |
| 16 | 256598513516 | 圆锥滚子轴承30216 | Tapered roller bearing 30216 | 2 | |
| 17 | 256598513517 | 轮毂4CC11-00-04 | Wheel hub | 2 | |
| 18 | 256598513518 | 圆锥滚子轴承30219 | Tapered roller bearing 30219 | 2 | |
| 19 | 256598513519 | 油封挡圈4CC11-00-03 | Oil seal ring | 2 | |
| 20 | 256598513520 | 油封φ140Xφ170X15(Z6650-14005) | Oil seal phi phi 140 x 170 x15 | 2 | |
| 21 | 256598513521 | 制动鼓4CC11-00-02 | Brake drum | 2 | |
| 22 | 256598513522 | 左制动器总成/1430(HRA01C3701-70021) | Left brake assembly /1430 | 1 | |
| 23 | 256598513523 | 制动器六角螺栓M16X1.5X46(4CC11-00-15) | Brake hexagon bolt m16x1.5x46 | 12 | |
| 24 | 256598513524 | 制动器六角螺栓M16X1.5X45(4CC11-00-16) | Brake hexagon bolt m16x1.5x45 | 4 | |



**256698501003左制动器/Left brake assembly**

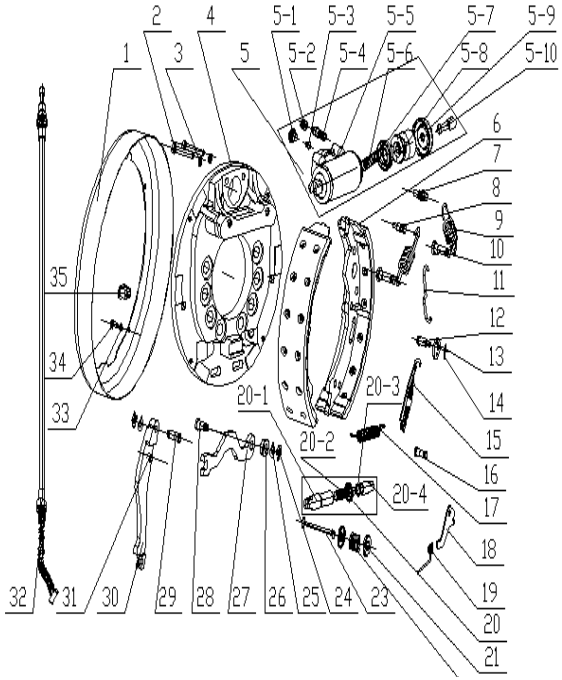


| 序号/NO | 编码/SN | 名称 | Name | 数量/QTY | 备注/Remark |
|---|---|---|---|---|---|
| A | 256598513522 | 左制动器总成/1430 | Left brake assembly /1430 | 1 | |
| 1 | 256598523550 | 罩壳 | shell | 1 | |
| 2 | 256598523551 | 螺栓GB5782-86-M10X40 | Bolt GB5782-86-M10X40 | 2 | |
| 3 | 256598523552 | 弹簧垫圈GB93-8 | Spring Washer GB93-8 | 2 | |
| 4 | 256598523553 | 左制动底板FH31792-010L | Left brake bottom plate FH31792-010L | 1 | |
| 5 | 256598523554 | 制动分泵总成FH31792-030 | Left brake bottom plate FH31792-010L | 1 | |
| 5-1 | ▲ | 分泵活塞顶杆25783-71300G | Branch pump piston top rod 25783-71300G | 2 | |
| 5-2 | ▲ | 分泵防尘罩25783-72101 | Dust cover for pump division 25783-72101 | 2 | |
| 5-3 | ▲ | 分泵活塞25783-71260G | Branch pump piston 25783-71260G | 2 | |
| 5-4 | ▲ | 分泵皮碗25783-76040G | Sub-pump leather bowl 25783-76040G | 2 | |
| 5-5 | ▲ | 制动分泵缸FH31792-031 | Brake sub-pump cylinder FH31792-031 | 1 | |
| 5-6 | ▲ | 制动分泵油塞24433-76070G | Brake pump oil plug 24433-76070G | 1 | |
| 5-7 | ▲ | 螺纹防护塞24433-76080G | Thread protection plug 24433-76080G | 1 | |
| 5-8 | ▲ | 分泵放气螺钉24433-76090G | Sub-pump bleed screw 24433-76090G | 1 | |
| 5-9 | ▲ | 分泵放气螺钉帽24433-76100G | Subpump bleed screw cap 24433-76100G | 1 | |
| 6 | 256598523555 | 制动蹄带摩擦片总成(后)FH31792-020H | Brake shoe with Friction Plate Assembly (rear)FH31792-020H | 1 | |
| | 256598523556 | 制动蹄带摩擦片总成(前)FH31792-020Q | Brake Shoe with Friction Plate Assembly (front)FH31792-020Q | 1 | |
| 7 | 256598523557 | 销2-25783-71450G | Pin 2-25783-71450G | 1 | |
| 8 | 256598523558 | 销1-25783-71460G | Pin 1-25783-71460G | 1 | |
| 9 | 256598523559 | 回位弹簧-FH31792-002 | Return spring -FH31792-002 | 2 | |
| 10 | 256598523560 | 回位簧销25783-71420G | Return spring pin 25783-71420G | 2 | |
| 11 | 256598523561 | 左上拉杆25783-71470G-L | Upper left pull rod 25783-71470G-L | 1 | |
| 12 | 256598523562 | 摇臂销25783-71430G | Rocker arm Pin 25783-71430G | 1 | |
| 13 | 256598523563 | 摇臂25783-71500G | Rocker arm 25783-71500G | 1 | |
| 14 | 256598523564 | 开口销GB91-1.6*16 | Cotter pin GB91-1.6*16 | 1 | |
| 15 | 256598523565 | 弹簧铆接装置AOIC3-71210G | Spring riveting device AOIC3-71210G | 1 | |
| 16 | 256598523566 | 扭簧销25783-71410G | Torsion spring pin 25783-71410G | 1 | |

| | | | | | |
|---|---|---|---|---|---|
| 17 | 256598523567 | 下拉簧25783-71370G | Lower spring 25783-71370G | 1 | |
| 18 | 256598523568 | 棘爪25783-71480G | Pawl 25783-71480G | 1 | |
| 19 | 256598523569 | 左扭簧25783-71360G-L | Left torsion spring 25783-71360G-L | 1 | |
| 20 | 256598523570 | 左调整器总成25783-71160G-L | Left Regulator Assy 25783-71160G-L | 1 | |
| 20-1 | ▲ | 左间隙调整套25783-71170G-L | Left clearance adjusting sleeve 25783-71170G-L | 1 | |



**256698501003左制动器/Left brake assembly**

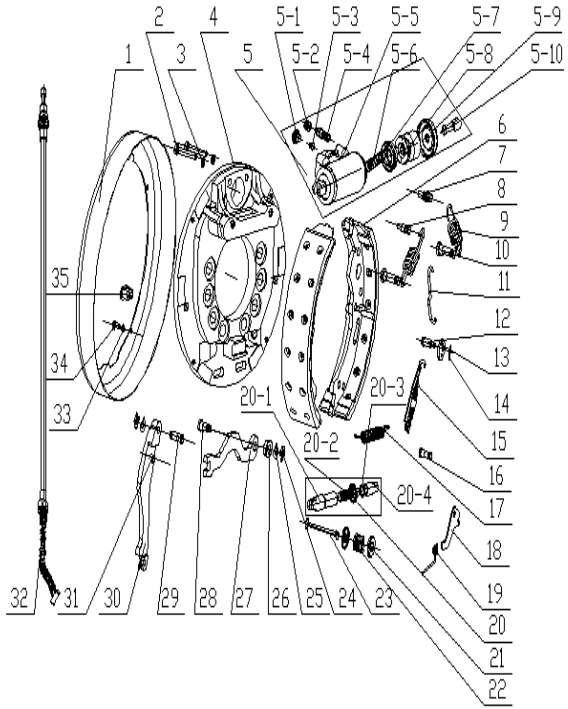


| 序号/NO | 编码/SN | 名称 | Name | 数量/QTY | 备注/Remark |
|---|---|---|---|---|---|
| 20-2 | ▲ | 左间隙调整丝25783-71180G-L | Left clearance adjustment wire 25783-71180G-L | 1 | |
| 20-3 | ▲ | 垫圈25783-71190G | Gasket 25783-71190G | 1 | |
| 20-4 | ▲ | 间隙调整杆25783-71200G | Gap adjusting rod 25783-71200G | 1 | |
| 21 | 256598523571 | 压簧座24433-70020G | Press spring seat 24433-70020G | 4 | |
| 22 | 256598523572 | 压簧25783-71350G | Pressure spring 25783-71350G | 2 | |
| 23 | 256598523573 | 压簧拉杆25783-71440G | Pressure spring pull rod 25783-71440G | 2 | |
| 24 | 256598523574 | 杆销挡圈24433-70170G | Rod pin retaining ring 24433-70170G | 2 | |
| 25 | 256598523575 | 弹性垫片24433-70160G | Elastic gasket 24433-70160G | 2 | |
| 26 | 256598523576 | 衬套AOIC3-72061 | Bush AOIC3-72061 | 1 | |
| 27 | 256598523577 | 手制动推杆AOIC3-72051 | Hand brake push lever AOIC3-72051 | 1 | |
| 28 | 256598523578 | 推杆销AOIC3-72071 | Push rod pin AOIC3-72071 | 1 | |
| 29 | 256598523579 | 拉杆销24433-72041 | Tie rod pin 24433-72041 | 1 | |
| 30 | 256598523580 | 左手制动拉杆AOIC3-72031-L | Left hand brake pull rod AOIC3-72031-L | 1 | |
| 31 | 256598523581 | 销AOIC3-72021 | PinAOIC3-72021 | 1 | |
| 32 | 256598523582 | 左制动钢索总成 | Lift brake cable assy | 1 | |
| 33 | 256598523583 | 弹簧垫圈GB93-6 | Spring washer GB93-6 | 4 | |
| 34 | 256598523584 | 螺栓M6X10 | Bolt M6X10 | 4 | |
| 35 | 256598523585 | 胶堵25783-71490G | Glue plug 25783-71490G | 2 | |



**256698501004右制动器/Right brake assembly**

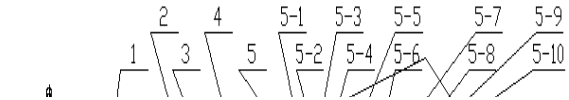


| 序号/NO | 编码/SN | 名称 | Name | 数量/QTY | 备注/Remark |
|---|---|---|---|---|---|
| A | 256598513510 | 右制动器总成/1970 | Right brake assembly /1970 | 1 | |
| 1 | 256598523550 | 罩壳 | shell | 1 | |
| 2 | 256598523551 | 螺栓GB5782-86-M10X40 | Bolt GB5782-86-M10X40 | 2 | |
| 3 | 256598523552 | 弹簧垫圈GB93-8 | Spring Washer GB93-8 | 2 | |

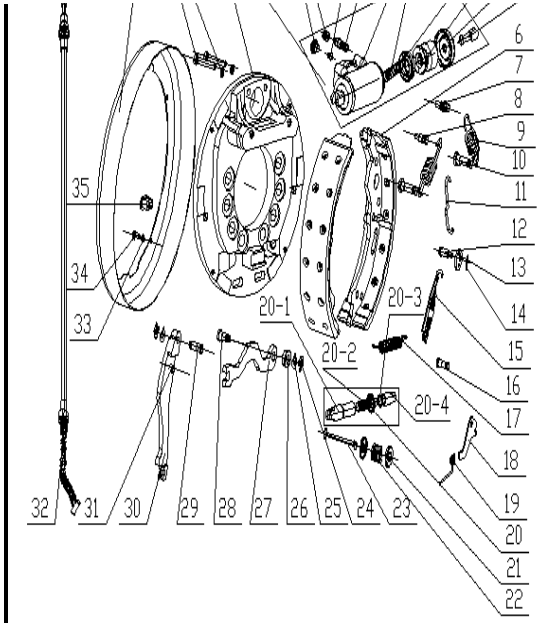


| | | | | | |
|---|---|---|---|---|---|
| 4 | 256598523590 | 右制动底板FH31792-010R | Right brake bottom plate FH31792-010R | 1 | |
| 5 | 256598523554 | 制动分泵总成FH31792-030 | Right brake bottom plate FH31792-010L | 1 | |
| 5-1 | ▲ | 分泵活塞顶杆25783-71300G | Branch pump piston top rod 25783-71300G | 2 | |
| 5-2 | ▲ | 分泵防尘罩25783-72101 | Dust cover for pump division 25783-72101 | 2 | |
| 5-3 | ▲ | 分泵活塞25783-71260G | Branch pump piston 25783-71260G | 2 | |
| 5-4 | ▲ | 分泵皮碗25783-76040G | Sub-pump leather bowl 25783-76040G | 2 | |
| 5-5 | ▲ | 制动分泵缸FH31792-031 | Brake sub-pump cylinder FH31792-031 | 1 | |
| 5-6 | ▲ | 制动分泵油塞24433-76070G | Brake pump oil plug 24433-76070G | 1 | |
| 5-7 | ▲ | 螺纹防护塞24433-76080G | Thread protection plug 24433-76080G | 1 | |
| 5-8 | ▲ | 分泵放气螺钉24433-76090G | Sub-pump bleed screw 24433-76090G | 1 | |
| 5-9 | ▲ | 分泵放气螺钉帽24433-76100G | Subpump bleed screw cap 24433-76100G | 1 | |
| 6 | 256598523555 | 制动蹄带摩擦片总成(后)FH31792-020H | Brake shoe with Friction Plate Assembly (rear)FH31792-020H | 1 | |
| | 256598523556 | 制动蹄带摩擦片总成(前)FH31792-020Q | Brake Shoe with Friction Plate Assembly (front)FH31792-020C | 1 | |
| 7 | 256598523557 | 销2-25783-71450G | Pin 2-25783-71450G | 1 | |
| 8 | 256598523558 | 销1-25783-71460G | Pin 1-25783-71460G | 1 | |
| 9 | 256598523559 | 回位弹簧-FH31792-002 | Return spring -FH31792-002 | 2 | |
| 10 | 256598523560 | 回位簧销25783-71420G | Return spring pin 25783-71420G | 2 | |
| 11 | 256598523591 | 右上拉杆25783-71470G-R | Upper right pull rod 25783-71470G-R | 1 | |
| 12 | 256598523562 | 摇臂销25783-71430G | Rocker arm Pin 25783-71430G | 1 | |
| 13 | 256598523563 | 摇臂25783-71500G | Rocker arm 25783-71500G | 1 | |
| 14 | 256598523564 | 开口销GB91-1.6*16 | Cotter pin GB91-1.6*16 | 1 | |
| 15 | 256598523565 | 弹簧铆接装置AOIC3-71210G | Spring riveting device AOIC3-71210G | 1 | |
| 16 | 256598523566 | 扭簧销25783-71410G | Torsion spring pin 25783-71410G | 1 | |
| 17 | 256598523567 | 下拉簧25783-71370G | Lower spring 25783-71370G | 1 | |
| 18 | 256598523568 | 棘爪25783-71480G | Pawl 25783-71480G | 1 | |
| 19 | 256598523592 | 右扭簧25783-71360G-R | Right torsion spring 25783-71360G-R | 1 | |
| 20 | 256598523593 | 左调整器总成25783-71160G-R | Right Regulator Assy 25783-71160G-R | 1 | |
| 20-1 | ▲ | 左间隙调整套25783-71170G-R | Right clearance adjusting sleeve 25783-71170G-R | 1 | |



**256698501004制动器/Brake assembly**

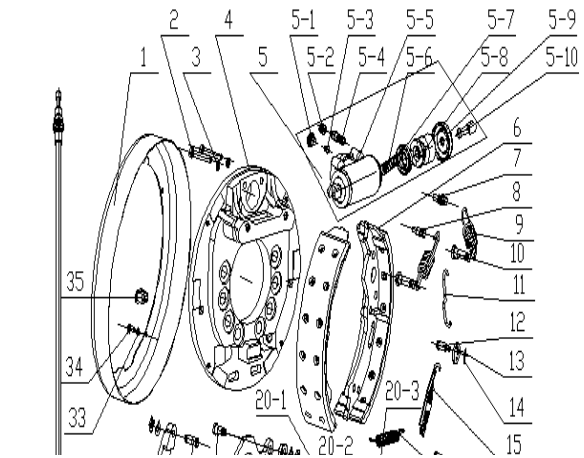


| 序号/NO | 编码/SN | 名称 | Name | 数量/QTY | 备注/Remark |
|---|---|---|---|---|---|
| 20-2 | ▲ | 右间隙调整丝25783-71180G-R | Right clearance adjustment wire 25783-71180G-R | 1 | |
| 20-3 | ▲ | 垫圈25783-71190G | Gasket 25783-71190G | 1 | |
| 20-4 | ▲ | 间隙调整杆25783-71200G | Gap adjusting rod 25783-71200G | 1 | |
| 21 | 256598523571 | 压簧座24433-70020G | Press spring seat 24433-70020G | 4 | |
| 22 | 256598523572 | 压簧25783-71350G | Pressure spring 25783-71350G | 2 | |
| 23 | 256598523573 | 压簧拉杆25783-71440G | Pressure spring pull rod 25783-71440G | 2 | |
| 24 | 256598523574 | 杆销挡圈24433-70170G | Rod pin retaining ring 24433-70170G | 2 | |
| 25 | 256598523575 | 弹性垫片24433-70160G | Elastic gasket 24433-70160G | 2 | |
| 26 | 256598523576 | 衬套AOIC3-72061 | Bush AOIC3-72061 | 1 | |
| 27 | 256598523577 | 手制动推杆AOIC3-72051 | Hand brake push lever AOIC3-72051 | 1 | |
| 28 | 256598523578 | 推杆销AOIC3-72071 | Push rod pin AOIC3-72071 | 1 | |
| 29 | 256598523579 | 拉杆销24433-72041 | Tie rod pin 24433-72041 | 1 | |
| 30 | 256598523594 | 右手制动拉杆AOIC3-72031-R | Right hand brake pull rod AOIC3-72031-R | 1 | |
| 31 | 256598523581 | 销AOIC3-72021 | PinAOIC3-72021 | 1 | |
| 32 | 256598523586 | 右制动钢索总成 | Right brake cable assy | 1 | |
| 33 | 256598523583 | 弹簧垫圈GB93-6 | Spring washer GB93-6 | 4 | |
| 34 | 256598523584 | 螺栓M6X10 | Bolt M6X10 | 4 | |
| 35 | 256598523585 | 胶堵25783-71490G | Glue plug 25783-71490G | 2 | |

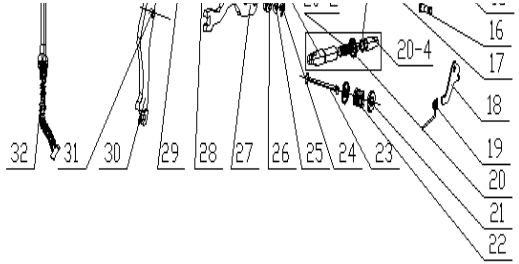




**256698501005变速箱/Gearbox**

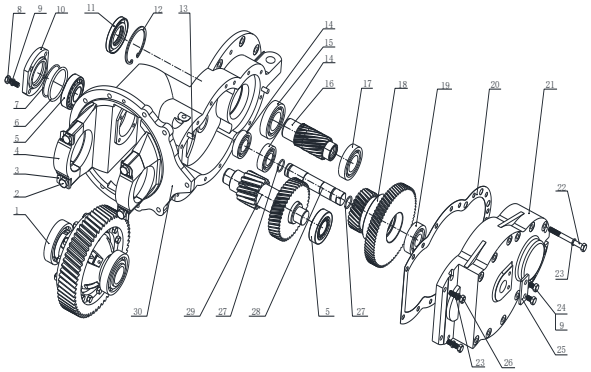

| 序号/NO | 编码/SN | 名称 | Name | 数量/QTY | 备注/Remark |
|---|---|---|---|---|---|
| 1 | 256598520001 | 差速器总成HDCS50A.901 | Differential assembly | 1 | |
| 2 | 256598520002 | 螺栓YDS45.084 | Bolt | 4 | |
| 3 | 256598520003 | 锁片YDS45.083 | Lock plate | 4 | |
| 4 | 256598520004 | 轴承座HDCS50.012 | bearing | 2 | |
| 5 | 256598520005 | 圆锥滚子轴承32208 | Tapered roller bearings | 2 | |
| 6 | 256598520006 | 调整垫JDS30.043 | Adjust the pad | 4/3 | |
| 7 | 256598520007 | O形圈80×2.65 | O-ring | 1 | |
| 8 | 910100300036 | 螺栓GB5783-M10x25-8.8 | Bolt GB5783 M10X25-8.8 | 4 | |
| 9 | 910400500007 | 弹簧垫圈GB93-10 | Spring washer gb93-10 | 6 | |
| 10 | 256598520008 | 轴承盖HDCS50.011 | Bearing cover | 1 | |
| 11 | 256598520009 | 油封50×90×10 | Oil seal | 1 | |
| 12 | 910401400024 | 孔用弹性挡圈GB893.1-90 | Elastic baffle ring gb893.1-90 for holes | 1 | |
| 13 | 256598520010 | 圆锥销6×20 | Taper pin | 2 | |
| 14 | 910700200022 | 轴承GB276-6207-2RS | Bearing GB276 rs - 6207-2RS | 2 | |
| 15 | 910700200025 | 轴承GB276-6210-2RS | Bearing GB276 rs - 6210-2RS | 1 | |
| 16 | 256598520011 | 输入轴HDCS50A.802 | Input shaft | 1 | |
| 17 | 910700200025 | 轴承GB276-6210-2RS | Bearing GB276 rs - 6210-2RS | 1 | |
| 18 | 256598520012 | 双联齿轮HDCS50A.803 | Duplex gear | 1 | |
| 19 | 910700200033 | 轴承GB276-6307-2RS | Bearing GB276 rs - 6307-2RS | 1 | |
| 20 | 256598520013 | 纸垫HDCS50.010 | Paper pad | 1 | |
| 21 | 256598520014 | 箱盖HDCS50.002G1 | Lid | 1 | |
| 22 | 910100300051 | 螺栓GB5783-M12x35-8.8 | Bolt GB5783 M12X35-8.8 | 12 | |
| 23 | 910400500008 | 弹簧垫圈GB93-12 | Spring washer gb93-12 | 15 | |
| 24 | 256598520015 | 螺栓M10×16 | Bolt | 2 | |
| 25 | 256598520016 | 挡块HDCS25.008 | Stop | 1 | |
| 26 | 910100300049 | 螺栓GB5783-M12x25-8.8 | Bolt GB5783 M12X25-8.8 | 3 | |
| 27 | 910800100006 | O形圈-外35x3.1 | O-outside 35x3-1 | 2 | |
| 28 | 256598520017 | 轴HDCS50.009 | Shaft | 1 | |
| 29 | 256598520018 | 齿轴HDCS50A.804 | Gear shaft | 1 | |
| 30 | 256598520019 | 箱体HDCS50.001G1 | Enclosure | 1 | |

## 256698501006差速箱/Differential mechanism

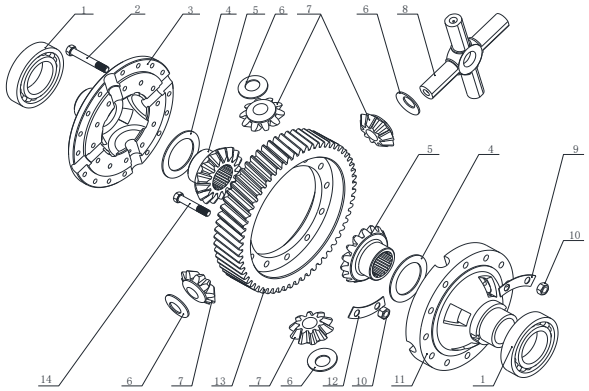


| 序号/NO | 编码/SN | 名称 | Name | 数量/QTY | 备注/Remark |
|---|---|---|---|---|---|
| 1 | 910700200051 | 轴承GB276-6216-2RS | Bearing GB276 rs - 6216-2 | 2 | |
| 2 | 256598520020 | 螺栓CJS45.010 | Bolt | 8 | |
| 3 | 256598520021 | 右差速器壳CJS45.004 | Right differential housing | 1 | |
| 4 | 256598520022 | 垫圈CJS45.008 | The gasket | 1/3×2 | |
| 5 | 256598520023 | 半轴齿轮CJS45.007 | Half shaft gear | 2 | |
| 6 | 256598520024 | 止推垫圈CJS45.009 | Thrust washer | 4 | |
| 7 | 256598520025 | 行星齿轮CJS45.006 | Planetary gear | 4 | |
| 8 | 256598520026 | 十字轴HDCS50.015 | The spider | 1 | |
| 9 | 256598520027 | 垫片或垫圈GB/T 7244-14 | Gasket or washer | 8 | |
| 10 | 256598520028 | 螺母M14×1.5 | Nut | 20 | |
| 11 | 256598520029 | 左差速器壳CJS45.003 | Left differential housing | 1 | |
| 12 | 256598520030 | 锁紧垫片HDCS50.013 | Lock washers | 6 | |
| 13 | 256598520031 | 齿圈HDCS50A.008 | Ring gear | 1 | |
| 14 | 256598520032 | 螺栓HDCS50.014 | Bolt | 12 | |



## 256698501007起升电机及安装/Lifting motor and installation

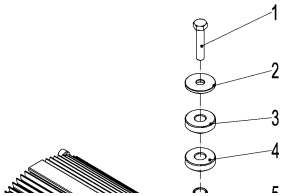


| 序号/NO | 编码/SN | 名称 | Name | 数量/QTY | 备注/Remark |
|---|---|---|---|---|---|
| 1 | 910100100034 | 螺栓GB5782-M10x55-8.8 | Bolt GB5782 M10x55-8.8 | 4 | |
| 2 | 255032520002 | 垫圈Φ40xΦ11x4 | Gasket Φ Φ 40 x 11 x4 | 4 | |
| 3 | 255032520003 | 减振垫 | Damping pad | 8 | |
| 4 | 275332521003 | 垫圈Φ40xΦ20x8 | Washer Φ40xΦ20x8 | 4 | |
| 5 | 255032520001 | 加强套Φ13xΦ10.5x32 | Strengthen Φ set 13 Φ x32 x 10.5 | 4 | |
| 6 | 256632510004 | 电机(交流)HPB26 | Motor (AC)HPB26 | 1 | |
| 7 | 256523512006 | 齿轮泵 | Pump | 2 | |
| 8 | 910400100007 | 平垫圈GB97.1-10-200HV | Flat washer GB97.1-10-200 hv | 6 | |
| 9 | 910400500007 | 弹簧垫圈GB93-10 | Spring washer gb93-10 | 10 | |
| 10 | 910100300037 | 螺栓GB5783-M10x30-8.8 | Bolt GB5783 M10x30-8.8 | 4 | |
| 11 | 255098513251 | 传感器 (HP ) | Sensor(HP) | 1 | |

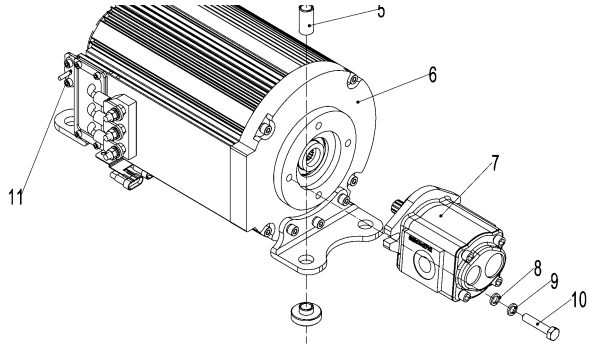




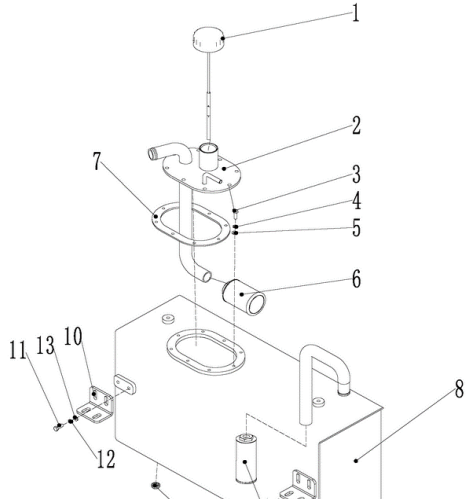


**256698501008工作油箱及安装/Work tank**

| 序号/NO | 编码/SN | 名称 | Name | 数量/QTY | 备注/Remark |
|---|---|---|---|---|---|
| 1 | 255019010003 | 油尺塞总成 | Dipstick plug assembly | 1 | |
| 2 | 256619011002 | 盖板焊合 | Cover welding | 1 | |
| 3 | 910100300022 | 螺栓GB5783-M8x20-8.8 | Bolt GB5783-M8x20-8.8 | 16 | |
| 4 | 910400100006 | 平垫圈GB97.1-8-200HV | Flat washer GB97.1-8-200HV | 16 | |
| 5 | 910400500006 | 弹簧垫圈GB93-8 | Spring washer GB93-8 | 16 | |
| 6 | 255019010004 | 网式过滤器WU63x100 | Mesh filter WU63x100 | 1 | |
| 7 | 255019020013 | 密封垫204x134x1.5-R | Gasket 204x134x1.5-R | 2 | |
| 8 | 256619011001 | 油箱焊合 | Tank welding | 1 | |
| 9 | 255019020015 | 放油塞M20x1.5 | Oil drain plug M20x1.5 | 1 | |
| 10 | 256619021014 | 固定板(油箱) | Fixed plate (tank) | 2 | |
| 11 | 910100300035 | 螺栓GB5783-M10x20-8.8 | Bolt GB5783-M10x20-8.8 | 4 | |
| 12 | 910400100007 | 平垫圈GB97.1-10-200HV | Flat washer GB97.1-10-200HV | 8 | |
| 13 | 910400500007 | 弹簧垫圈GB93-10 | Spring washer GB93-10 | 8 | |
| 14 | 256619021020 | 回油滤芯Y1027 | 组件 | 1 | 20240408新增回油滤芯 |

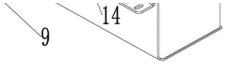


| | | | | | |
|---|---|---|---|---|---|
| | | | | | |
| | | | | | |
| | | | | | |
| | | | | | |
| | | | | | |
| | | | | | |
| | | | | | |



**256698501009驱动轮总成（前轮）/Drive wheel assembly (Front wheel)**

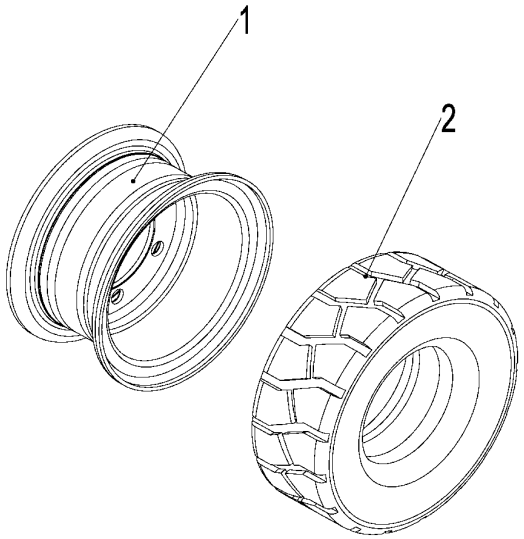


| 序号/NO | 编码/SN | 名称 | Name | 数量/QTY | 备注/Remark |
|---|---|---|---|---|---|
| A | 256513010001 | 驱动轮总成250-15(实心/朝阳) | Drive wheel assembly 250-15 (soild/Chaoyang) | 2 | |
| A | 256513010002 | 驱动轮总成250-15(环保/朝阳) | Drive wheel assembly 250-15 (environmentally/Chaoyang) | 2 | 选装 |
| A | 256613010001 | 轮胎总成28X12.5-15(实心/朝阳) | Drive wheel assembly 28X12.5-15 (soild/Chaoyang) | 2 | 50QL |
| A | 256613010002 | 轮胎总成28X12.5-15(环保/朝阳) | Drive wheel assembly 28X12.5-15 (environmentally/Chaoyang | 2 | 选装 |
| 1 | 256513011001 | 轮辋总成7.50V-15 | Rim assembly 7.50V-15 | 1 | |
| 1 | 256613011001 | 轮辋总成9.75-15 | Rim assembly 9.75-15 | 1 | 50QL |
| 2 | 256513011010 | 轮胎250-15(实心/朝阳) | Tire 250-15 (soild/Chaoyang) | 1 | |
| 2 | 256513011011 | 轮胎250-15(环保/朝阳) | Tire 250-15 (environmentally/Chaoyang) | 1 | 选装 |
| 2 | 256613011002 | 轮胎28X12.5-15(实心/朝阳) | Tire 28X12.5-15 (soild/Chaoyang) | 1 | 50QL |
| 2 | 256613011003 | 轮胎28X12.5-15(环保/朝阳) | Tire 28X12.5-15 (environmentally/Chaoyang) | 1 | 选装 |



**256698501010转向桥及安装/Steering axle and installation**

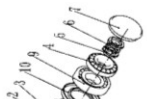

| 序号/NO | 编码/SN | 名称 | Name | 数量/QTY | 备注/Remark |
|---|---|---|---|---|---|
| A | 256616010001 | 转向桥总成(康达) | Steering bridge assembly（KD) | 1 | 包含1-52 |
| 1 | 256698526001 | 转向轮毂KE-3103201-00 | Steering bridge assembly KE-3103201-00 | 2 | |
| 2 | 256698526002 | 轮毂螺栓M14X1.5H-3103202-00 | Rim Bolt M14X1.5H-3103202-00 | 16 | |

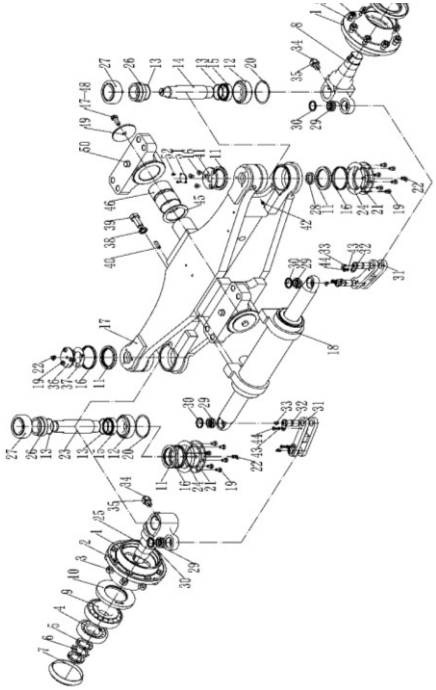

| | | | | | |
|---|---|---|---|---|---|
| 3 | 256598526003 | 轮毂螺母M14X1.5F-3103110-00 | Rim Nut M14X1.5F-3103110-00 | 16 | |
| 4 | 256598526004 | 圆锥滚子轴承GB297-31309 | Tapered roller bearing GB297-31309 | 2 | |
| 5 | 281298516003 | 小圆螺母GB810-M39x1.5 | Small round nut GB810-M39x1.5 | 4 | |
| 6 | 910400900008 | 圆螺母用止动垫圈GB858-39 | Lock washer for round nut GB858-39 | 2 | |
| 7 | 256698526005 | 轮毂盖L-3103204-00 | Hub cover L-3103204-00 | 2 | |
| 8 | 256698526006 | 右转向节KE-2404201-00 | Right steering knuckle KE-2404201-00 | 1 | |
| 9 | 910700600013 | 圆锥滚子轴承GB297-30311 | Tapered roller bearing GB297-30311 | 2 | |
| 10 | 256698526007 | 油封GB9877-FB75X130X12 | Oil seal GB9877-FB75X130X12 | 2 | |
| 11 | 256698526008 | 油封GB9877-FB60X80X8 | Oil seal GB9877-FB60X80X8 | 4 | |
| 12 | 910700600028 | 圆锥滚子轴承GB397-32208 | Tapered roller bearing GB397-32208 | 2 | |
| 13 | 256698526009 | O型圈GB3452.1-50X1.8 | O-ring GB3452.1-50 X1.8 | 4 | |
| 14 | 256698526010 | 右转向节主销KE-2404202-03 | Kingpin of right steering knuckle KE-2404202-03 | 1 | |
| 15 | 256698526011 | 轮毂下支撑座KE-3103206-00 | Hub lower support seat KE-3103206-00 | 2 | |
| 16 | 256698526012 | 内六角沉头螺钉GB90.3-M8X16 | Hexagon socket countersunk head screw GB90.3-M8X16 | 3 | |
| 17 | 256698526013 | 转向桥体KE-2401100-03 | Steering axle body KE-2401100-03 | 1 | |
| 18 | 256698516001 | 转向油缸总成KE-3409100-00 | Steering cylinder assembly KE-3409100-00 | 1 | |
| 19 | 910100300019 | 六角螺栓GB/T5783-M8X12 | Hexagon bolt GB/T5783-M8X12 | 17 | |
| 20 | 256698526014 | 转向节调整垫片KE-2404103-00 | Steering knuckle adjusting shim KE-2404103-00 | 若干 | |
| 21 | 256698526015 | 下盖板KE-2401113-00 | Lower cover plate KE-240113-00 | 2 | |
| 22 | 256698526016 | 接头式压注油杯JB7940.2-M10X1 | Joint type pressure filling cup JB7940.2-M10X1 | 3 | |
| 23 | 256698526017 | 左转向节主销KE-2404102-00 | Left steering knuckle kingpin KE-2404102-00 | 1 | |
| 24 | 256698526018 | 下盖板纸垫KE-2401115-00 | Lower cover paper pad KE-240115-00 | 2 | |
| 25 | 256698526019 | 左转向节KE-2404101-00 | Left steering knuckle KE-2404101-00 | 1 | |
| 26 | 256698526020 | 轮毂上支撑座KE-3103205-00 | Hub upper support seat KE-3103205-00 | 2 | |
| 27 | 256698526021 | 圆锥滚子轴承GB297-33208 | Tapered roller bearing GB297-33208 | 2 | |
| 28 | 256698526022 | 油封GB9877-FB25X40X7 | Oil seal GB9877-FB25X40X7 | 2 | |
| 29 | 256698526023 | 关节轴承GE20ES | Joint bearing GE20ES | 4 | |
| 30 | 256698526024 | 关节轴承挡圈KE-3412301-00 | Spherical plain bearing retainer KE-3412301-00 | 4 | |



**256698501010转向桥及安装/Steering axle and installation**

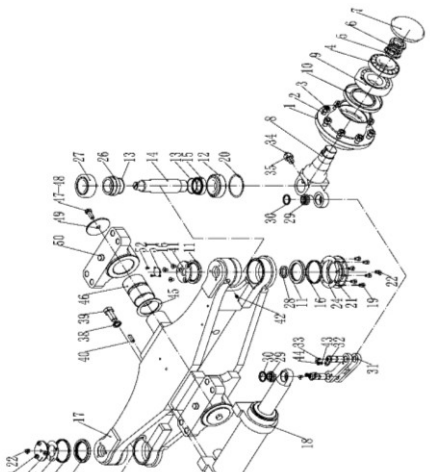

| 序号/NO | 编码/SN | 名称 | Name | 数量/QTY | 备注/Remark |
|---|---|---|---|---|---|
| 31 | 256698526041 | 连杆KE-3412100-00 | Connecting rod KE-3412100-00 | 2 | |
| 32 | 256698526025 | 连杆销组件KE-3412200-00 | Connecting rod pin assembly KE-3412200-00 | 4 | |
| 33 | 256698526026 | 接头式压注油杯JB7940.2-M6 | Joint type pressure oil filling cup JB7940.2-M6 | 4 | |
| 34 | 256698526027 | 六角头锥端紧定螺钉GB78-M16 | Hexagon set screw with cone point GB78-M16 | 2 | |
| 35 | 256698526028 | 六角螺母GB41-M16 | Hexagon nut GB41-M16 | 2 | |
| 36 | 256698526029 | 上盖板KE-2401111-00 | Upper cover plate KE-240111-00 | 1 | |
| 37 | 256698526030 | 上盖板纸垫KE-2401114-00 | Upper cover paper pad KE-240114-00 | 1 | |
| 38 | 910400500011 | 弹簧垫圈GB93-18 | Spring washer GB93-18 | 4 | |
| 39 | 256698526031 | 六角螺栓GB5786-M18X1.5X45 | Hexagon bolt GB5786-M18X1.5X45 | 4 | |
| 40 | 256698526032 | 圆柱销GB119.1-10X30 | Straight pin GB119.1-10X30 | 2 | |
| 41 | 256698526033 | 上端盖KE-2401116-03 | Upper end cap KE-240116-03 | 1 | |
| 42 | 256698526034 | 直通式压注油杯GB1152-M6 | Straight-through pressure filling cup GB1152-M6 | 1 | |
| 43 | 910400500018 | 弹簧垫圈GB93-6 | Spring washer GB93-6 | 4 | |
| 44 | 910100300010 | 六角螺栓GB5781-M6X15 | Hexagon bolt GB5781-M6X15 | 4 | |
| 45 | 256698526040 | 支承座调整垫L-3412307/308/309-00 | Support seat adjusting pad L-3412307/308/309-00 | | |
| 46 | 256698526035 | 钢背轴承SF1-2.5-6540 | Steel back bearing SF1-2.5-6540 | 4 | |
| 47 | 910400500008 | 弹垫GB93-12 | Spring pad GB93-12 | 2 | |
| 48 | 910100300049 | 六角头螺栓GB5783-M12X25 | Hexagon bolt GB5783-M12X25 | 2 | |

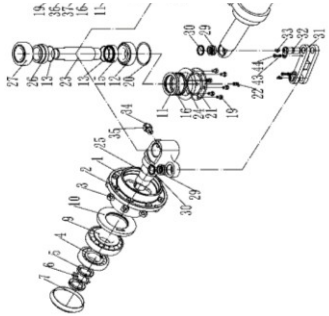

| | | | | | |
|---|---|---|---|---|---|
| 49 | 256698526036 | 轴端挡板L-3412316-00 | Shaft end baffle L-3412316-00 | 2 | |
| 50 | 256698526037 | 支撑座L-3412305-00 | Support seat L-3412305-00 | 2 | |
| 51 | 256698526038 | 防尘盖KE-2401117-03 | Dust cover KE-240117-03 | 1 | |
| 52 | 256698526039 | 六角头螺栓GB5783-M4x6 | Hexagon bolt GB5783-M4x6 | 2 | |



**256698501011转向油缸/Steering cylinder**

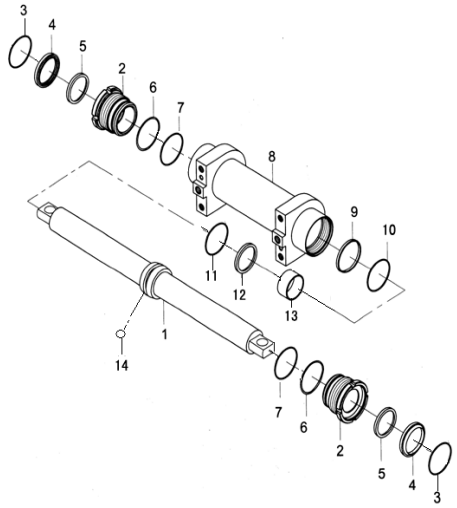


| 序号/NO | 编码/SN | 名称 | Name | 数量/QTY | 备注/Remark |
|---|---|---|---|---|---|
| 1 | ▲ | 活塞杆 | piston rod | 1 | |
| 2 | ▲ | 缸盖 | cylinder head | 2 | |
| 3 | ▲ | 防尘圈 | Dust ring | 2 | |
| 4 | ▲ | 佐康埃尔密封圈 | Zoconel seal ring | 2 | |
| 5 | ▲ | 活塞杆用导向环 | Guide ring for piston rod | 4 | |
| 6 | ▲ | 挡圈 | Retaining ring | 2 | |
| 7 | ▲ | O型密封圈 | O-ring | 2 | |
| 8 | ▲ | 缸体 | Cylinder block | 1 | |
| 9 | ▲ | T型特康格来圈 | T-shaped Tekanglai ring | 1 | |
| 10 | ▲ | O型密封圈 | O-ring | 1 | |
| 11 | ▲ | 活塞用导向环 | Guide ring for piston | 1 | |
| 12 | ▲ | 活塞用导向环 | Guide ring for piston | 1 | |
| 13 | ▲ | 活塞 | Piston | 1 | |
| 14 | ▲ | 钢球 | Steel ball | 1 | |
| A | 256698510007 | 油缸密封包（转向油缸） | Cylinder sealing package (steering cylinder) | 1 | 包含3-5，9-12 |

| | | | | | | |
|---|---|---|---|---|---|---|
| | | | | | | |
| | | | | | | |



**256698501012转向轮总成（后轮）/Steering wheel assembly (Rear wheel)**

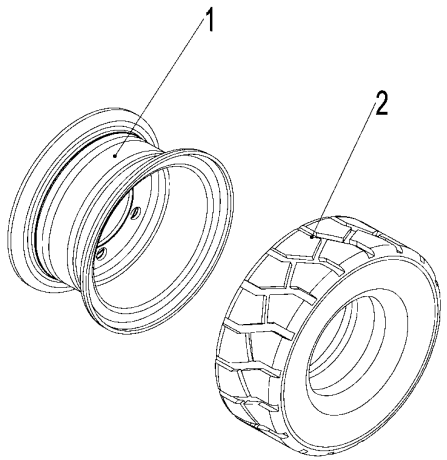


| 序号/NO | 编码/SN | 名称 | Name | 数量/QTY | 备注/Remark |
|---|---|---|---|---|---|
| A | 256615510001 | 轮胎总成23X9-10(实心/朝阳) | Tire assembly 23X9-10 (solid/Chaoyang) | 2 | |
| | 256615510002 | 轮胎总成23X9-10(环保/朝阳) | Tire assembly 23X9-10 (environmental protection/Chaoyang) | 2 | 选装 |
| 1 | 256615511001 | 轮辋总成6.50F-10 | Rim assembly 6.50F-10 | 1 | |
| 2 | 255013010003 | 轮胎23x9-10(实心/朝阳) | Tire 23x9-10 (solid/Chaoyang) | 1 | |
| | 255013010007 | 轮胎23x9-10(环保/朝阳) | Tire 23x9-10 (environmentally friendly/Chaoyang) | 1 | 选装 |



**2566985013角度传感器安装/Angle sensor installation**

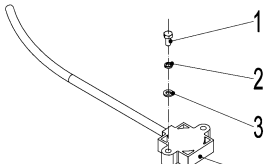


| 序号/NO | 编码/SN | 名称 | Name | 数量/QTY | 备注/Remark |
|---|---|---|---|---|---|
| 1 | 910200200014 | 螺钉GB70.1-M4x12-8.8 | Screw GB70.1-M4x12-8.8 | 2 | |
| 2 | 910400500003 | 弹簧垫圈GB93-4 | Spring washer GB93-4 | 2 | |
| 3 | 910400100003 | 平垫圈GB97.1-4-200HV | Plain washer GB97.1-4-200HV | 2 | |
| 4 | 921800200007 | 电位器Vert-X | Angle sensor | 1 | |
| 5 | 910200200001 | 螺钉GB70.1-M3x8-8.8 | Screw GB70.1-M3x8-8.8 | 2 | |

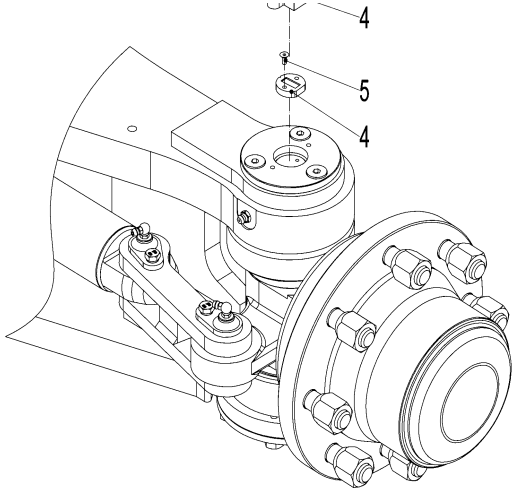




**256698501014行车制动/Service Brake**

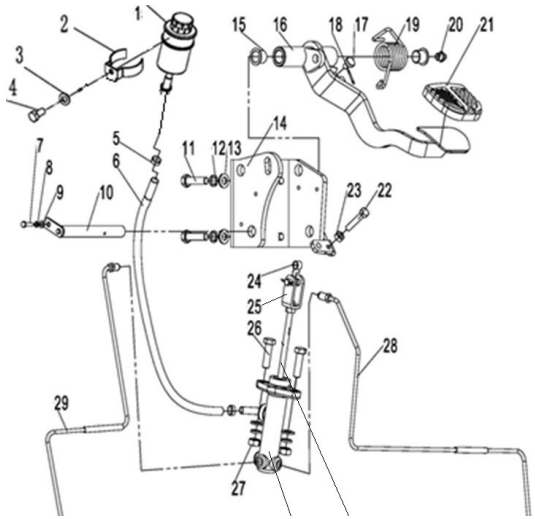


| 序号/NO | 编码/SN | 名称 | Name | 数量/QTY | 备注/Remark |
|---|---|---|---|---|---|
| 1 | 275011520020 | 油杯 | Grease nipple | 1 | |
| 2 | 275211511020 | 油杯固定环 | Bracket | 1 | |
| 3 | 910400500007 | 弹簧垫圈GB93-8 | Washer GB93-8 | 1 | |
| 4 | 910100300020 | 螺栓GB5783-M8x16-8.8 | Bolt GB5783-M8x16-8.8 | 1 | |
| 5 | 911000600001 | 喉箍QC/T390-(11-14) | Hose clamp QC/T390-(11-14) | 2 | |
| 6 | 255011520021 | 连接管 | Connecting pipe | 1 | |
| 7 | 910100300003 | 螺栓GB5783-M5x12-8.8 | Bolt GB5783-M5x12-8.8 | 1 | |
| 8 | 910400500004 | 弹簧垫圈GB93-5 | Washer GB93-5 | 1 | |
| 9 | 910400100004 | 平垫圈GB97.1-5-200HV | Washer GB97.1-5-200HV | 1 | |
| 10 | 255011510003 | 带耳轴Φ16x135 | Axle Φ16x135 | 1 | |
| 11 | 910100300039 | 螺栓GB5783-M10x40-8.8 | Bolt GB5783-M10x40-8.8 | 4 | |
| 12 | 910400500007 | 弹簧垫圈GB93-10 | Washer GB93-10 | 6 | |
| 13 | 910400100007 | 平垫圈GB97.1-10-200HV | Washer GB97.1-10-200HV | 6 | |
| 14 | 256811511004 | 脚制动支架焊合 | Foot brake holder welding | 1 | |
| 15 | 940500100006 | 复合套Φ16xΦ18x15-SF-1 | Bushing Φ16xΦ18x15-SF-1 | 2 | |
| 16 | 256611511002 | 踏板焊合 | Pedal weiding | 1 | |
| 17 | 255011520010 | 缓冲垫 | Damping pad | 1 | |
| 18 | 910600600015 | 开口销GB91-2x20 | Split pin GB91-2x20 | 1 | |
| 19 | 255011520008 | 扭簧 | Spring | 1 | |
| 20 | 911200100004 | 油杯JB7940.1-M10x1 | Grease nipple JB7940.1-M10x1 | 1 | |
| 21 | 255011520013 | 踏板(橡胶) | Pedal (rubber) | 1 | |
| 22 | 910100100023 | 螺栓GB5782-M8x45-8.8 | Bolt GB5782-M8x45-8.8 | 1 | |
| 23 | 910300100006 | 螺母GB6170-M8-10 | Nut GB6170-M8-10 | 1 | |

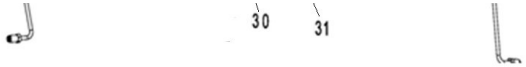


| | | | | | |
|---|---|---|---|---|---|
| 24 | 940500100048 | 复合套Φ10xΦ12x8-SF-1 | Bushing Φ10xΦ12x8-SF-1 | 1 | |
| 25 | 256811521022 | 挺杆连接块 | Rod clevis | 1 | |
| 26 | 910100300038 | 螺栓GB5783-M10x35-8.8 | Bolt GB5783-M10x35-8.8 | 2 | |
| 27 | 910300100007 | 螺母GB6170-M10-10 | NutGB6170-M10-10 | 2 | |
| 28 | 256611511009 | 右制动钢管 | Brake steel pipe welding | 1 | |
| 29 | 256611511010 | 左制动钢管 | Brake steel pipe welding | 1 | |
| 30 | 256611511030 | 制动泵 | Brake pump | 1 | |
| 31 | 256611521021 | 挺杆(50Q) | Tappet | 1 | |
| A | 256611510005 | 脚制动总成 | Foot brake assembly | 1 | 含除(1-6,28-29) |



**252198501015驻车制动安装/Parking brake installation**

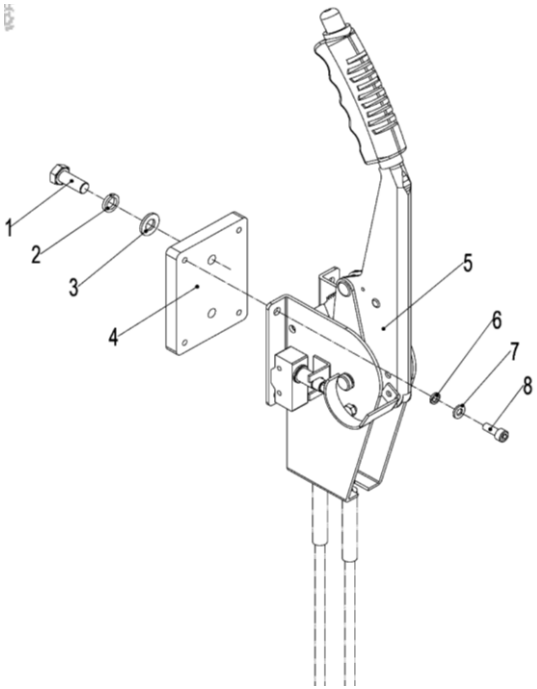


| 序号/NO | 编码/SN | 名称 | Name | 数量/QTY | 备注/Remark |
|---|---|---|---|---|---|
| 1 | 910100300035 | 螺栓GB5783-M10x20-8.8 | Bolt GB5783-M10x20-8.8 | 2 | |
| 2 | 910400500007 | 弹簧垫圈GB93-10 | Spring washer GB93-10 | 2 | |
| 3 | 910400100007 | 平垫圈GB97.1-10-200HV | Washer GB97.1-10-200HV | 2 | |
| 4 | 256812021003 | 垫板(手制动) | Backing plate (Parking brake) | 1 | |
| 5 | XG1801542747 | 手制动总成 | Parking Brake Assembly | 1 | |
| 6 | 910400100005 | 平垫圈GB97.1-6-200HV | Washer GB97.1-6-200HV | 4 | |
| 7 | 910400500005 | 弹簧垫圈GB93-6 | Spring washer GB93-6 | 4 | |
| 8 | 910100300010 | 螺栓GB5783-M6x16-8.8 | Bolt GB5783-M6x16-8.8 | 4 | |



**256698501016控制面板/Control Panel**

| 序号/NO | 编码/SN | 名称 | Name | 数量/QTY | 备注/Remark |
|---|---|---|---|---|---|
| 1 | 940400400001 | 板黄螺母M6-t(2-4) | Nut M6 | 6 | |

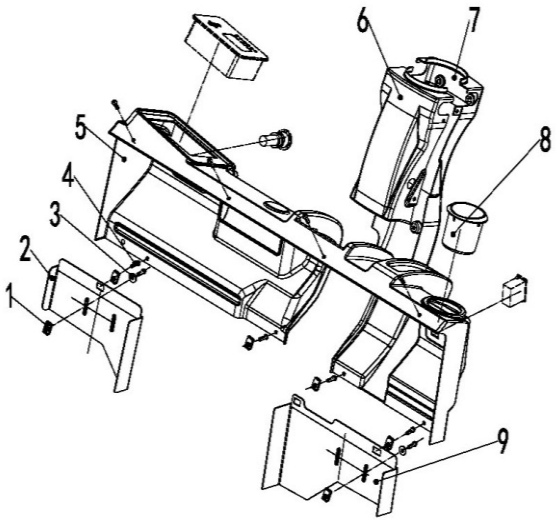


| | | | | | |
|---|---|---|---|---|---|
| 2 | 256621511006 | 盖板焊合(右) | Cover assembly | 1 | |
| 3 | 910400200002 | 平垫6 | Washer GB97.1-6-200HV | 4 | |
| 4 | 941100100009 | 螺钉M6x12-8.8 | Screw M6x12 | 6 | |
| 5 | 256810021001 | 仪表罩(30Q) | Instrument mask | 1 | |
| 6 | 255010020005 | 前盖 | Cover | 1 | |
| 7 | 255010020006 | 后盖 | Cover | 1 | |
| 8 | 256810021004 | 制动液杯盖 | Cover | 1 | |
| 9 | 256621511004 | 盖板焊合(左) | Cover assembly | 1 | |



**256698501017转向装置及安装/Steering device and installation**

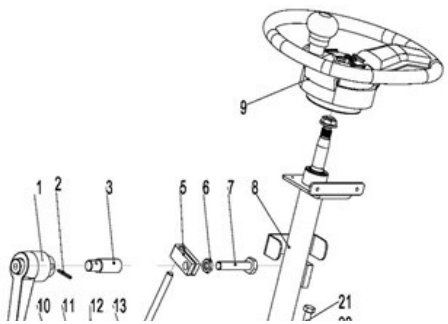


| 序号/NO | 编码/SN | 名称 | Name | 数量/QTY | 备注/Remark |
|---|---|---|---|---|---|
| 1 | 255015010007 | 可调手柄 | Adjustable handle | 1 | |
| 2 | 910600400011 | 弹性圆柱销GB879.1-4x30 | Elastic cylindrical pin GB879.1-4x30 | 1 | |
| 3 | 255015020025 | 夹柄螺套 | Clamp handle insert | 1 | |
| 4 | 256615010002 | 转向器 | Steering gear | 1 | |
| 5 | 255015020019 | 锁紧块 | Locking block | 1 | |
| 6 | 910300300006 | 螺母GB6172.1-M12-05 | Nut GB6172.1-M12-05 | 1 | |
| 7 | 910100300057 | 螺栓GB5783-M12x70-8.8 | Bolt GB5783-M12x70-8.8 | 1 | |
| 8 | 255015010001 | 转向管柱总成 | Steering column assembly | 1 | |
| 9 | 255015010003 | 方向盘 | Steering wheel | 1 | |
| 10 | 910600700014 | 销轴GB882-6x26x1.6 | Pin shaft GB882-6x26x1.6 | 1 | |
| 11 | 910600600005 | 开口销GB91-1.6x10 | Split pin GB91-1.6x10 | 1 | |
| 12 | 255015020002 | 固定座 | Fixed seat | 1 | |
| 13 | 255015010005 | 调节杆焊合 | Adjusting rod welding | 1 | |
| 14 | 255015020021 | 调节螺钉 | Adjusting screw | 1 | |
| 15 | 911200100004 | 油杯JB7940.1-M10x1 | Oil cup JB7940.1-M10x1 | 1 | |
| 16 | 940500200016 | 复合套(带肩)Φ16xΦ18x16-SF-1 | Composite sleeve (with shoulder) Φ 16x Φ 18x16-SF-1 | 2 | |

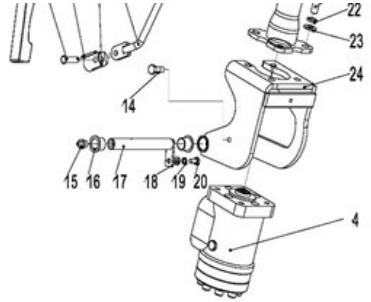


| | | | | | |
|---|---|---|---|---|---|
| 17 | 255011510003 | 带耳轴Φ16x135 | With trunnion Φ 16x135 | 1 | |
| 18 | 910400100005 | 平垫圈GB97.1-6-200HV | Plain washer GB97.1-6-200HV | 1 | |
| 19 | 910400500005 | 弹簧垫圈GB93-6 | Spring washer GB93-6 | 1 | |
| 20 | 910100300009 | 螺栓GB5783-M6x12-8.8 | Bolt GB5783-M6x12-8.8 | 1 | |
| 21 | 910100300036 | 螺栓GB5783-M10x25-8.8 | Bolt GB5783-M10x25-8.8 | 4 | |
| 22 | 910400500007 | 弹簧垫圈GB93-10 | Spring washer GB93-10 | 4 | |
| 23 | 910400100007 | 平垫圈GB97.1-10-200HV | Plain washer GB97.1-10-200HV | 4 | |
| 24 | 281215011004 | 支架焊合 | Support welding | 1 | |



**256698501018电瓶盖安装/Installation of battery cover**

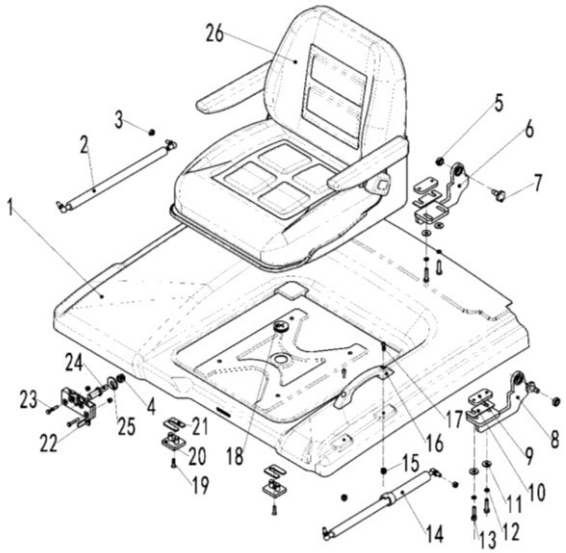


| 序号/NO | 编码/SN | 名称 | Name | 数量/QTY | 备注/Remark |
|---|---|---|---|---|---|
| 1 | 256621011002 | 箱盖焊合 | Welding of box cover | 1 | |
| 2 | 940400100030 | 气弹簧200N(D620) | Air spring 200N(D620) | 2 | |
| 3 | 910300500004 | 螺母GB889.1-M8-10 | Fixed plate | 1 | |
| 4 | 910300500006 | 螺母GB889.1-M12-10 | Nut GB889.1-M12-10 | 1 | |
| 5 | 255021010014 | 关节轴承GE12E | Bearing GB9163-GE12E | 2 | |
| 6 | 255021010006 | 铰链焊合(右) | Hinge bracket (right) | 1 | |
| 7 | 255021020043 | 固定螺栓 | Bolt | 2 | |
| 8 | 255021010005 | 铰链焊合(左) | Hinge bracket (left) | 1 | |
| 9 | 255021020045 | 座板 | Wire plate | 2 | |
| 10 | 255021020054 | 调整垫 | Adjust the gasket | 2 | |
| 11 | 910400100006 | 平垫圈GB97.1-8-200HV | Washer GB97.1-8-200HV | 4 | |
| 12 | 910400500006 | 弹簧垫圈GB93-8 | Spring washer GB93-8 | 4 | |
| 13 | 910100300024 | 螺栓GB5783-M8x30-8.8 | Bolt GB5783 M8x30-8.8 | 4 | |
| 14 | 940400100031 | 气弹簧500N(D620)-自锁 | Air spring 500N(D620)- self locking | 1 | |
| 15 | 910300500003 | 螺母GB889.1-M6-10 | Nut GB889.1-M6-10 | 2 | |
| 16 | 255021020020 | 拉手 | The shake handshandle | 1 | |
| 17 | 910200500053 | 螺钉GB818-M6x20-4.8 | Screw GB818-M6x20-4.8 | 2 | |
| 18 | 255021020046 | 保护圈φ35 | To protect the coil | 1 | |
| 19 | 910200400019 | 螺钉GB70.3-M6x25-8.8 | Screw GB70.3-M6x25-8.8 | 2 | |
| 20 | 255021020068 | 缓冲垫 | Damping pad | 2 | |
| 21 | 255021020071 | 调整垫(缓冲垫) | Adjust the gasket | 2 | |
| 22 | 255021010010 | 顶盖锁 | Head cover lock | 1 | |
| 23 | 910100300014 | 螺栓GB5783-M6x35-8.8 | Bolt GB5783 M6x35-8.8 | 2 | |
| 24 | 255021020052 | 锁舌(顶盖锁) | Lock tongue | 1 | |
| 25 | 910400200005 | 大垫圈GB96.1-12-200HV | Washer GB96.1-12-200HV | 1 | |
| 26 | 255037510002 | 座椅BF1-1BC(标准) | Seat BF1-1BC (STD.) | 1 | |
| | 255037510003 | 座椅(舒适型) | Seat (comfort) | 1 | 选装/Optional |
| | 255037510004 | 座椅(减振型) | Seat (Vibration) | 1 | 选装/Optional |

| | | | | | | |
|---|---|---|---|---|---|---|
| | | | | | | |
| | | | | | | |
| | | | | | | |



**256698501019左侧板安装/Left side panel installation**

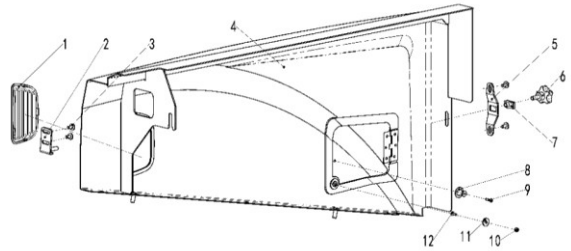


| 序号/NO | 编码/SN | 名称 | Name | 数量/QTY | 备注/Remark |
|---|---|---|---|---|---|
| 1 | 212121520102 | 通风板(前罩) | Air hole | 1 | |
| 2 | 255021010015 | 挂钩焊合(左) | Hook welding (left) | 1 | |
| 3 | 941100100009 | 螺钉M6X12-8.8 | Screw M6x12-4.8 | 7 | |
| 4 | 256621011003 | 侧板焊合(左) | Side plate welding (left) | 1 | |
| 5 | 255021020062 | 支架(右侧板) | Fixing plate | 1 | |
| 6 | 281223021006 | 盖板螺栓 | Bolt | 1 | |
| 7 | 940400400002 | 板簧螺母M8-t(2-4) | Nut M8-t(2-4) | 2 | |
| 8 | 251221022025 | 蘑菇拉手Φ24xΦ13x20 | The shake handshandle Φ24xΦ13x20 | 1 | |
| 9 | 910200300008 | 螺钉GB70.2-M4x16-8.8 | Screw GB70.2-M4x16-8.8 | 1 | |
| 10 | 910300100003 | 螺母GB6170-M4-10 | Nut GB6170-M4-10 | 1 | |
| 11 | 940600100006 | 磁钢Φ18x3(带孔) | Magnetic SteeΦ18x3 | 1 | |
| 12 | 910200400005 | 螺钉GB70.3-M4x12-8.8 | ScrewGB70.3-M4x12-8.8 | 1 | |



**256698501020右侧板安装/Right side panel installation**

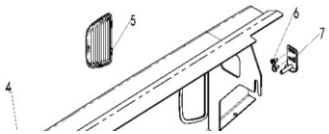


| 序号/NO | 编码/SN | 名称 | Name | 数量/QTY | 备注/Remark |
|---|---|---|---|---|---|
| 1 | 281223021006 | 盖板螺栓 | Bolt | 1 | |
| 2 | 940400400002 | 板簧螺母M8-t(2-4) | Nut M8-t(2-4) | 2 | |
| 3 | 255021020062 | 支架(右侧板) | Fixing plate | 1 | |
| 4 | 256621011017 | 侧板焊合(右) | Side plate welding (right) | 1 | |
| 5 | 212121520102 | 通风板(前罩) | Air hole | 1 | |
| 6 | 941100100009 | 螺钉M6X12-8.8 | Screw M6x12-4.8 | 7 | |

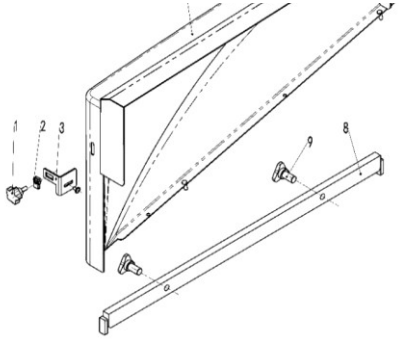


| | | | | | |
|---|---|---|---|---|---|
| 7 | 255021010015 | 挂钩焊合(左) | Hook welding (left) | 2 | |
| 8 | 256621015001 | 电瓶挡块焊合 | Position limiter | 1 | |
| 9 | 255021020059 | 星形把手 | Star shaped handle | 2 | |



**256698501021右侧板安装/Right side panel installation**

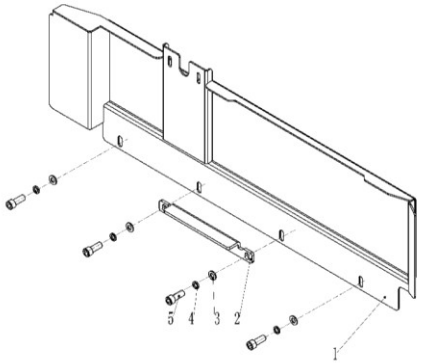


| 序号/NO | 编码/SN | 名称 | Name | 数量/QTY | 备注/Remark |
|---|---|---|---|---|---|
| 1 | 256621011007 | 前挡板焊合 | Cover plate | 1 | |
| 2 | 256621020003 | 支架 | Fixing plate | 1 | |
| 3 | 910400100007 | 平垫圈GB97.1-10-200HV | Washer GB97.1-10-200HV | 4 | |
| 4 | 910400500007 | 弹簧垫圈GB93-10 | Spring washer GB93-10 | 4 | |
| 5 | 910200200077 | 螺钉GB70.1-M10x30-8.8 | Screw GB70.1-M10x30-8.8 | 4 | |

**256698501022地板安装/Floor installation**

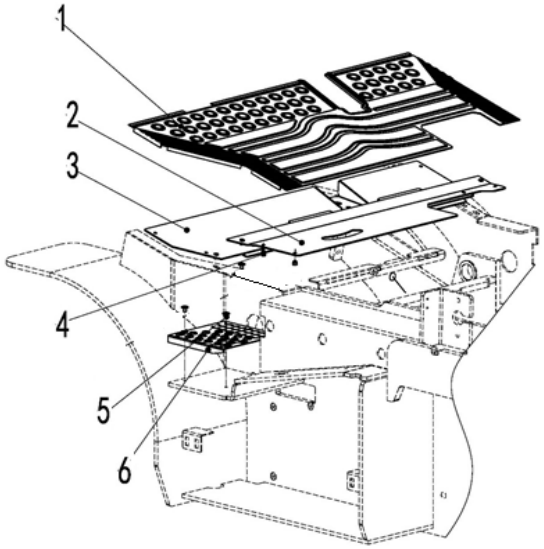


| 序号/NO | 编码/SN | 名称 | Name | 数量/QTY | 备注/Remark |
|---|---|---|---|---|---|
| 1 | 256618020005 | 地板垫 | Floor mat | 1 | |
| 2 | 256618011002 | 地板焊合(后) | Floor welding (rear) | 1 | |
| 3 | 256618011001 | 地板焊合(前) | Floor welding (front) | 1 | |
| 4 | 255018020010 | 橡胶垫 | Rubber pad | 6 | |
| 5 | 941100100001 | 螺钉M8x12-8.8 | Screw M8x12-8.8 | 4 | |
| 6 | 256618021006 | 上车踏脚板(50) | Upper running board (50) | 2 | |



**256698501023车架装配/Frame assembly**

| 序号/NO | 编码/SN | 名称 | Name | 数量/QTY | 备注/Remark |
|---|---|---|---|---|---|

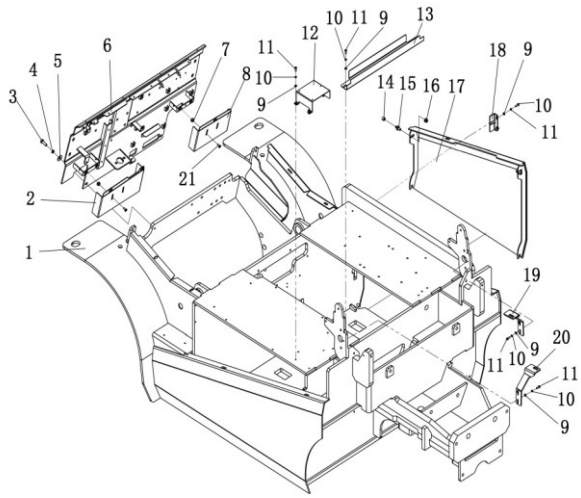


| | | | | | |
|---|---|---|---|---|---|
| 1 | 256621511001 | 车架焊合 | Frame welding | 1 | |
| 2 | 256621511004 | 盖板焊合(左) | Cover plate welding (left) | 1 | |
| 3 | 910100300037 | 螺栓GB5783-M10x30-8.8 | Bolt GB5783-M10x30-8.8 | 1 | |
| 4 | 910400500007 | 弹簧垫圈GB93-10 | Spring washer GB93-10 | 1 | |
| 5 | 910400200004 | 大垫圈GB96.1-10-200HV | Large washer GB96.1-10-200HV | 1 | |
| 6 | 256621511009 | 仪表架焊合 | Instrument frame welding | 1 | |
| 7 | 940801500001 | M6卡式螺母 | M6 bayonet nut | 2 | |
| 8 | 256621511006 | 盖板焊合(右) | Cover plate welding (right) | 1 | |
| 9 | 910400100005 | 平垫圈GB97.1-6-200HV | Plain washer GB97.1-6-200HV | 10 | |
| 10 | 910400500005 | 弹簧垫圈GB93-6 | Spring washer GB93-6 | 10 | |
| 11 | 910200200035 | 螺钉GB70.1-M6x16-8.8 | Screw GB70.1-M6x16-8.8 | 10 | |
| 12 | 256621521088 | 安装板(保险丝盒) | Mounting plate (fuse box) | 1 | |
| 13 | 256621521086 | 线槽(油泵电机) | Trunking (oil pump motor) | 1 | |
| 14 | 505621020004 | 缓冲垫Φ15xΦ6x10 | Cushion Φ 15x Φ 6x10 | 2 | |
| 15 | 505621020005 | 铰链轴Φ8x19 | Hinge shaft Φ 8x19 | 2 | |
| 16 | 910300500005 | 螺母GB889.1-M10-10 | Nut GB889.1-M10-10 | 2 | |
| 17 | 256621511003 | 右侧门焊合 | Right door welding | 1 | |
| 18 | 256621521080 | 固定支架(侧板) | Fixed bracket (side panel) | 1 | |
| 19 | 256621521091 | 后盖板右支架 | Rear cover right bracket | 1 | |
| 20 | 256621521092 | 后盖板左支架 | Rear cover left bracket | 1 | |
| 21 | 941100100009 | 螺钉M6x12-8.8 | Screw M6x12-8.8 | 2 | |



**256698501024护顶架装配/Top guard assembly**

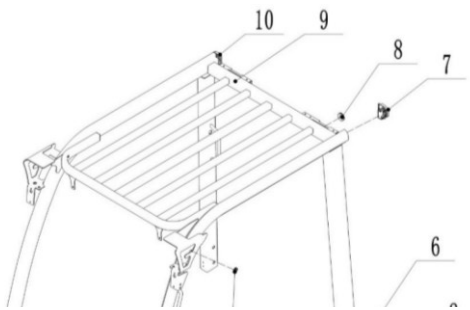


| 序号/NO | 编码/SN | 名称 | Name | 数量/QTY | 备注/Remark |
|---|---|---|---|---|---|
| 1 | 910400200005 | 大垫圈GB96.1-12-200HV | Big washer GB96.1-12-200HV | 4 | |
| 2 | 910400500008 | 弹簧垫圈GB93-12 | Spring washer GB93-12 | 8 | |
| 3 | 910100300050 | 螺栓GB5783-M12x30-8.8 | Bolt GB5783 M12x30-8.8 | 8 | |
| 4 | 255022020003 | 大灯穿线圈 | The headlamp goes through the coil | 2 | |
| 5 | 910100300059 | 螺栓GB5783-M12x80-8.8 | Bolt GB5783 M12x80-8.8 | 2 | |
| 6 | 910400100008 | 平垫圈GB97.1-12-200HV | The flat washer GB97.1-12-200 hv | 4 | |
| 7 | 255022020001 | 防护罩一(异型管) | Protective cover I (special shaped tube) | 1 | |
| 8 | 255022020004 | 尾灯出线圈 | Tail light out coil | 2 | |
| 9 | 256622011001 | 护顶架焊合(5T) | The top guard is welded together | 1 | |
| 10 | 255022020002 | 防护罩二(异型管) | Protective cover II (special shaped tube) | 1 | |

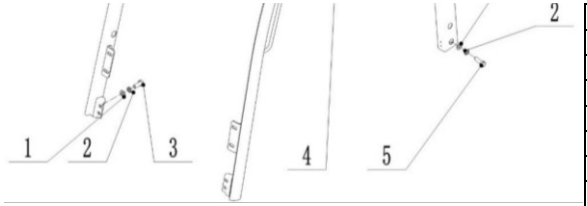




**256698501025平衡重装配/Balance weight assembly**

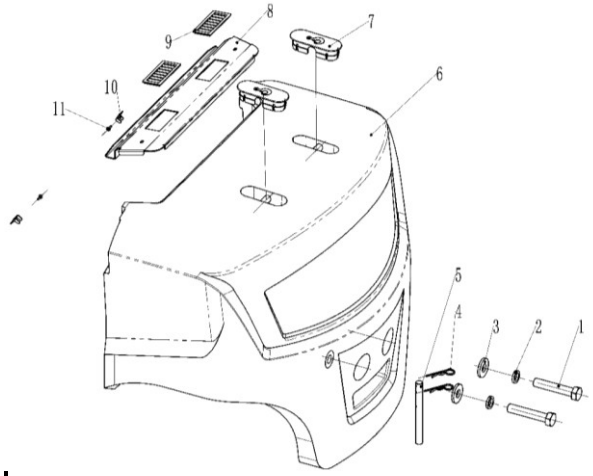


| 序号/NO | 编码/SN | 名称 | Name | 数量/QTY | 备注/Remark |
|---|---|---|---|---|---|
| 1 | 910100100111 | 螺栓GB5782-M30x160-8.8 | Bolt GB5782-M30x160-8.8 | 2 | |
| 2 | 910400500014 | 弹簧垫圈GB93-30 | Spring washer GB93-30 | 2 | |
| 3 | 256623021007 | 垫圈70x31x8 | Washer 70x31x8 | 2 | |
| 4 | 910601000002 | 锁销GB4329-5x105 | Pin GB4329-5x105 | 2 | |
| 5 | 251223021005 | 牵引栓(BNS15) | Traction Bolt (BNS15) | 1 | |
| 6 | 256623021004 | 平衡重(45Q) | Balance weight (45Q) | 1 | 45Q |
| | 256623021002 | 平衡重(50Q) | Balance weight (50Q) | 1 | 50Q |
| | 256623021004 | 平衡重(50H) | Balance weight (50QL) | 1 | 50QL |
| 7 | 255023020002 | 装饰盖 | Decorative cover | 2 | |
| 8 | 256623021009 | 配重过渡盖板 | Transition cover plate | 1 | |
| 9 | 256022521057 | 百叶窗 | blind | 2 | |
| 10 | 255023020006 | 调整垫(配重上) | Adjusting pad (on counterweight) | 2 | |
| 11 | 941100100010 | 螺钉M6X20-8.8 | Screw M6X20-8.8 | 2 | |

**256698501026多路换向阀操纵（二联）/Multi-channel directional valve operation (Double)**

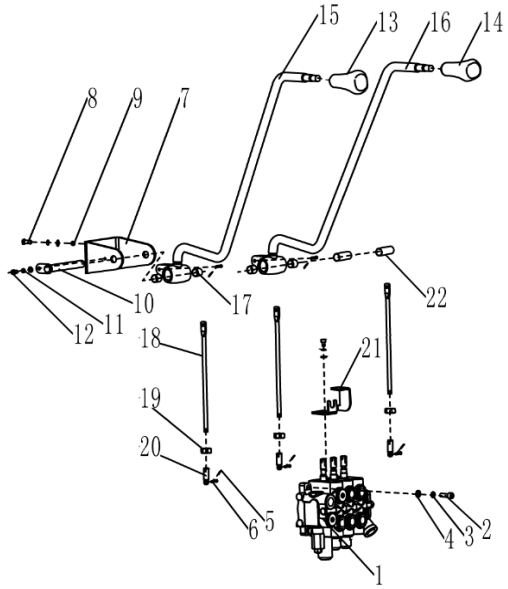


| 序号/NO | 编码/SN | 名称 | Name | 数量/QTY | 备注/Remark |
|---|---|---|---|---|---|
| 1 | 256624511002 | 多路阀(二联) | Multiple valve (double) | 1 | 普通阀用，带安全阀临时用 |
| | 256624512002 | 二联多路阀(索达电磁阀) | Dual multiway valve | 1 | 电磁阀专用 |
| 2 | 910100400006 | 螺栓GB5786-M10x1.25x40-8.8 | Bolt GB5786-M10x1.25x40-8.8 | 4 | |
| 3 | 910400500007 | 弹簧垫圈GB93-10 | Spring washer GB93-10 | 8 | |
| 4 | 910400100007 | 平垫圈GB97.1-10-200HV | Washer GB97.1-10-200HV | 12 | |
| 5 | 941100800001 | 销轴B4.75x20-c1B | Pin B4.75x20-c1B | 4 | |
| 6 | 910600600011 | 开口销GB91-2x12 | Cotter pin GB91-2x12 | 4 | |
| 7 | 252124520002 | 支架(阀杆) | Support (stem) | 1 | |
| 8 | 910100300037 | 螺栓GB5783-M10x30-8.8 | Bolt GB5783 M10x30-8.8 | 4 | |
| 9 | 910300100007 | 螺母GB6170-M10-10 | Nut GB6170-M10-10 | 4 | |
| 10 | 255024510009 | 带耳轴Φ16x168 | With trunnion Φ16x168 | 1 | |
| 11 | 910400500005 | 弹簧垫圈GB93-6 | Spring washer GB93-6 | 1 | |
| 12 | 910200200032 | 螺钉GB70.1-M6x10-8.8 | Screw GB70.1 M6x10-8.8 | 1 | |
| 13 | 253524520010 | 手柄球(起升) | Handle ball (lift) | 1 | |
| 14 | 253524520009 | 手柄球(倾斜) | Handle ball (tilt) | 1 | |
| 15 | 256824510002 | 操纵杆焊合(起升) | Joystick welding (lifting) | 1 | |
| 16 | 256824510003 | 操纵杆焊合(倾斜) | Joystick welding (tilt) | 1 | |
| 17 | 940500100006 | 复合套Φ16xΦ18x15-SF-1 | Composite set Φ16xΦ18x15-SF-1 | 4 | |
| 18 | 256824520003 | 连接杆 | Connecting rod | 2 | |
| 19 | 910300100006 | 螺母GB6170-M8-10 | Nut GB6170 M8-10 | 2 | |
| 20 | 255025020003 | 接头 | Joint | 2 | |
| 21 | 253524520014 | 支架(行程开关) | Bracket (travel switch) | 2 | |
| 22 | 255024520028 | 轴套Φ29xΦ16x38 | Shaft sleeve Φ29xΦ16x38 | 2 | |



**256698501027多路换向阀操纵（三联）/Multi-way directional valve operation (Triple)**

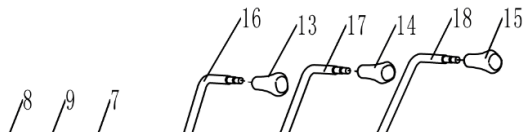


| 序号/NO | 编码/SN | 名称 | Name | 数量/QTY | 备注/Remark |
|---|---|---|---|---|---|
| 1 | 256625011002 | 多路阀(三联) | Multiple valve (triple) | 1 | 普通阀用，带安全阀临时用 |
| | 256624512003 | 三联多路阀(索达电磁阀) | Triple multiway valve | 1 | 电磁阀专用 |
| 2 | 910100400006 | 螺栓GB5786-M10x1.25x40-8.8 | Bolt GB5786-M10x1.25x40-8.8 | 4 | |
| 3 | 910400500007 | 弹簧垫圈GB93-10 | Spring washer GB93-10 | 8 | |
| 4 | 910400100007 | 平垫圈GB97.1-10-200HV | Washer GB97.1-10-200HV | 12 | |
| 5 | 941100800001 | 销轴B4.75x20-c1B | Pin B4.75x20-c1B | 6 | |
| 6 | 910600600011 | 开口销GB91-2x12 | Cotter pin GB91-2x12 | 6 | |
| 7 | 252124520002 | 支架(阀杆) | Support (stem) | 1 | |
| 8 | 910100300037 | 螺栓GB5783-M10x30-8.8 | Bolt GB5783 M10x30-8.8 | 4 | |

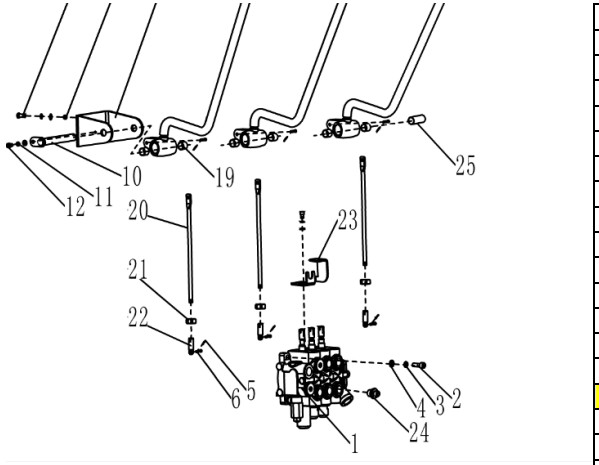


| | | | | | |
|---|---|---|---|---|---|
| 9 | 910300100007 | 螺母GB6170-M10-10 | Nut GB6170-M10-10 | 4 | |
| 10 | 255024510009 | 带耳轴Φ16x168 | With trunnion Φ16x168 | 1 | |
| 11 | 910400500005 | 弹簧垫圈GB93-6 | Spring washer GB93-6 | 1 | |
| 12 | 910200200032 | 螺钉GB70.1-M6x10-8.8 | Screw GB70.1 M6x10-8.8 | 1 | |
| 13 | 253524520010 | 手柄球(起升) | Handle ball (lift) | 1 | |
| 14 | 253524520009 | 手柄球(倾斜) | Handle ball (tilt) | 1 | |
| 15 | 253525020002 | 手柄球(属具1) | Handle ball (belonging to Ⅰ) | 1 | |
| 16 | 256824510002 | 操纵杆焊合(起升) | Joystick welding (lifting) | 1 | |
| 17 | 256824510003 | 操纵杆焊合(倾斜) | Joystick welding (tilt) | 1 | |
| 18 | 256825010004 | 操纵杆焊合(属具1) | Joystick welding (tool Ⅰ) | 1 | |
| 19 | 940500100006 | 复合套Φ16xΦ18x15-SF-1 | Composite setΦ16xΦ18x15-SF-1 | 6 | |
| 20 | 256824520003 | 连接杆 | Connecting rod | 3 | |
| 21 | 910300100006 | 螺母GB6170-M8-10 | Nut GB6170 M8-10 | 3 | |
| 22 | 255025020003 | 接头 | Joint | 3 | |
| 23 | 253524520014 | 支架(行程开关) | Bracket (travel switch) | 3 | |
| 24 | 251223520033 | 接头(直)8-M20x1.5-M16x1.5-24° | Joint 8-M20x1.5-M16x1.5-24° | 2 | 原255023520033-60° |
| 25 | 255024520028 | 轴套Φ29xΦ16x38 | Shaft sleeve Φ16xΦ29x38 | 1 | |



**256698501028多路换向阀操纵（四联）/Multi-way directional valve operation (Four-way)**

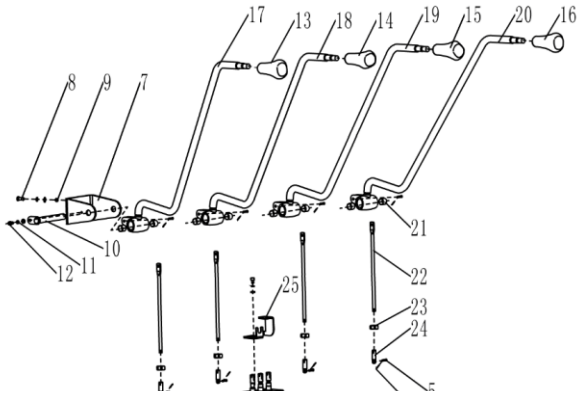


| 序号/NO | 编码/SN | 名称 | Name | 数量/QTY | 备注/Remark |
|---|---|---|---|---|---|
| 1 | 256625511002 | 多路阀(四联) | Multiway valve (quadruple) | 1 | 普通阀用，带安全阀临时用 |
| | 256624512004 | 四联多路阀（索达电磁阀） | Quadruple multiway valve | 1 | 电磁阀专用 |
| 2 | 910100400006 | 螺栓GB5786-M10x1.25x40-8.8 | Bolt GB5786-M10x1.25x40-8.8 | 4 | |
| 3 | 910400500007 | 弹簧垫圈GB93-10 | Spring washer GB93-10 | 8 | |
| 4 | 910400100007 | 平垫圈GB97.1-10-200HV | Washer GB97.1-10-200HV | 12 | |
| 5 | 941100800001 | 销轴B4.75x20-c1B | Pin B4.75x20-c1B | 8 | |
| 6 | 910600600011 | 开口销GB91-2x12 | Cotter pin GB91-2x12 | 8 | |
| 7 | 252124520002 | 支架(阀杆) | Support (stem) | 1 | |
| 8 | 910100300037 | 螺栓GB5783-M10x30-8.8 | Bolt GB5783 M10x30-8.8 | 4 | |
| 9 | 910300100007 | 螺母GB6170-M10-10 | Nut GB6170-M10-10 | 4 | |
| 10 | 255024510009 | 带耳轴Φ16x168 | With trunnion Φ16x168 | 1 | |
| 11 | 910400500005 | 弹簧垫圈GB93-6 | Spring washer GB93-6 | 1 | |
| 12 | 910200200032 | 螺钉GB70.1-M6x10-8.8 | Screw GB70.1 M6x10-8.8 | 1 | |
| 13 | 253524520010 | 手柄球(起升) | Handle ball (lift) | 1 | |
| 14 | 253524520009 | 手柄球(倾斜) | Handle ball (tilt) | 1 | |
| 15 | 253525020002 | 手柄球(属具1) | Handle ball (belonging to Ⅰ) | 1 | |
| 16 | 253525520002 | 手柄球(属具2) | Handball (belonging to 2) | 1 | |
| 17 | 256824510002 | 操纵杆焊合(起升) | Joystick welding (lifting) | 1 | |
| 18 | 256824510003 | 操纵杆焊合(倾斜) | Joystick welding (tilt) | 1 | |
| 19 | 256825010004 | 操纵杆焊合(属具1) | Joystick welding (tool Ⅰ) | 1 | |
| 20 | 256825510005 | 操纵杆焊合(属具2) | Joystick welding (kit Ⅱ) | 1 | |
| 21 | 940500100006 | 复合套Φ16xΦ18x15-SF-1 | Composite set Φ16xΦ18x15-SF-1 | 8 | |

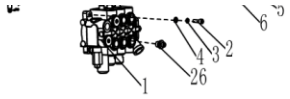


| | | | | | |
|---|---|---|---|---|---|
| 22 | 256824520003 | 连接杆 | Connecting rod | 4 | |
| 23 | 910300100006 | 螺母GB6170-M8-10 | Nut GB6170 M8-10 | 4 | |
| 24 | 255025020003 | 接头 | Joint | 4 | |
| 25 | 253524520014 | 支架(行程开关) | Bracket (travel switch) | 4 | |
| 26 | 251223520033 | 接头(直)8-M20x1.5-M16x1.5-24° | Joint 8-M20x1.5-M16x1.5-24° | 2 | 原255023520033-60° |



**256698501029液压系统/Hydraulic system**

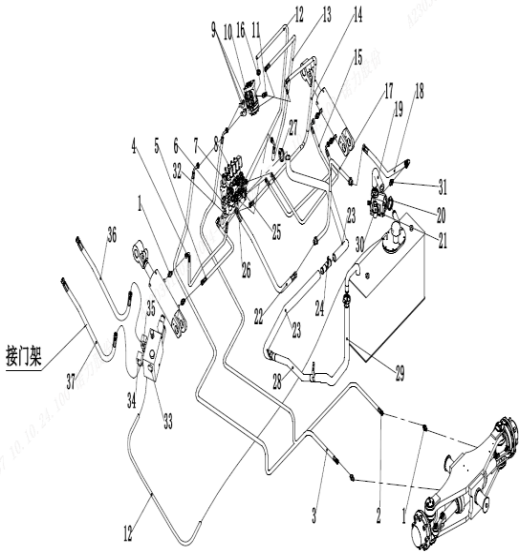


| 序号/NO | 编码/SN | 名称 | Name | 数量/QTY | 备注/Remark |
|---|---|---|---|---|---|
| 1 | 251223520034 | 接头(直)8-2xM16x1.5-24° | Connector (straight)8-2xM16x1.5-24° | 6 | |
| 2 | 256623529608 | 液压管总成(90°)10-L3350-1SC-24° | Hydraulic Line Assembly (90°)10-L3350-1SC-24° | 1 | |
| 3 | 256623529607 | 液压管总成(90°)10-L3650-1SC-24° | Hydraulic Line Assembly (90°)10-L3650-1SC-24° | 1 | |
| 4 | 256623529606 | 液压管总成(90°)10-L650-1SC-24° | Hydraulic Line Assembly (90°)10-L650-1SC-24° | 2 | |
| 5 | 256623529605 | 液压管总成(90°)10-L570-1SC-24° | Hydraulic Line Assembly (90°)10-L570-1SC-24° | 1 | |
| 6 | 256523521002 | 接头(锁定弯)11-M16x1.5-0 | Connector (Locking bend)11-M16x1.5-0 | 1 | |
| 7 | 256623521015 | 接头(直)15-2xM27x1.5-24° | Connector (straight)15-2xM27x1.5-24° | 1 | |
| 8 | 251223520033 | 接头(直)8-M20x1.5-M16x1.5-24° | Connector (straight)8-M20x1.5-M16x1.5-24° | 1 | |
| 9 | 282323520008 | 接头(锁定弯)10-M20x1.5-M16x1.5-24° | Connector (locking bend)10-M20x1.5-M16x1.5-24° | 3 | |
| 10 | 255023510008 | 接头(锁定弯)11-M20x1.5-0 | Connector (Locking bend)11-M20x1.5-0 | 1 | |
| 11 | 251223510003 | 接头(锁定弯)6-G1/4-M14x1.5-24° | Connector (locking bend)6-G1/4-M14x1.5-24° | 2 | |
| 12 | 900200401001 | 回油胶管23x5 | Oil return hose 23x5 | 4400 | MM |
| 13 | 256623529601 | 液压管总成(90°)10-L1320-1SC-24° | Hydraulic Pipe Assembly (90°)10-L1320-1SC-24° | 1 | |
| 14 | 256623529603 | 液压管总成(90°)8-L1320-1SC-24° | Hydraulic Line Assembly (90°)8-L1320-1SC-24° | 1 | |
| 15 | 256623529604 | 液压管总成(90°)10-L700-1SC-24° | Hydraulic Pipe Assembly (90°)10-L700-1SC-24° | 1 | |
| 16 | 911000600003 | 喉箍QC/T390-(22-26) | Throat clamp QC/T390-(22-26) | 2 | |
| 17 | 256623529610 | 多路阀进油钢管焊合 | Multiway valve inlet pipe welding | 1 | |
| 18 | 256623529609 | 液压管总成(90°)18-L450-2SC-24° | Hydraulic Line Assembly (90°)18-L450-2SC-24° | 1 | |
| 19 | 272523520003 | 胶管(吸油) | Rubber hose (oil suction) | 1 | |
| 20 | 911000600006 | 喉箍QC/T390-(40-45) | Throat clamp QC/T390-(40-45) | 2 | |
| 21 | 256523512006 | 齿轮泵(岛津13-30cc) | Gear pump (Shimazu 13-30cc) | 1 | |
| 22 | 256623529602 | 液压管总成(直)18-L550-2SC-24° | Hydraulic Line Assembly (Straight)18-L550-2SC-24° | 1 | |
| 23 | 252123520010 | 胶管(回油) | Hose (oil return) | 2 | |
| 24 | 252123510011 | 过渡钢管焊合 | Transition steel pipe welding | 3 | |
| 25 | 256623521020 | 接头(三通)7-3xM16x1.5-24° | Connector (tee)7-3xM16x1.5-24° | 2 | |
| 26 | 256523520030 | 接头(锁定弯)12-M27x1.5-M22x1.5-24° | Connector (locking bend)12-M27x1.5-M22x1.5-24° | 1 | |
| 27 | 911000600004 | 喉箍QC/T390-(34-38) | Throat clamp QC/T390-(34-38) | 4 | |
| 28 | 900200401003 | 回油胶管35x5 | Oil return hose 35x5 | 2300 | MM |
| 29 | 256623521013 | 胶管2(回油) | Hose 2(oil return) | 1 | |
| 30 | 255023510005 | 接头(转向弯)25-G1-Φ32 | Connector (steering bend)25-G1-Φ32 | 1 | |
| 31 | 256544029003 | 接头12--M27x2-M27x1.5-24° | Connector 12--M27x2-M27x1.5-24° | 1 | |
| 32 | 253623521013 | 接头(锁定弯)6-M12x1.5-M14x1.5-24° | Connector (locking bend)6-M12x1.5-M14x1.5-24° | 1 | |

## 256698501029液压系统/Hydraulic system

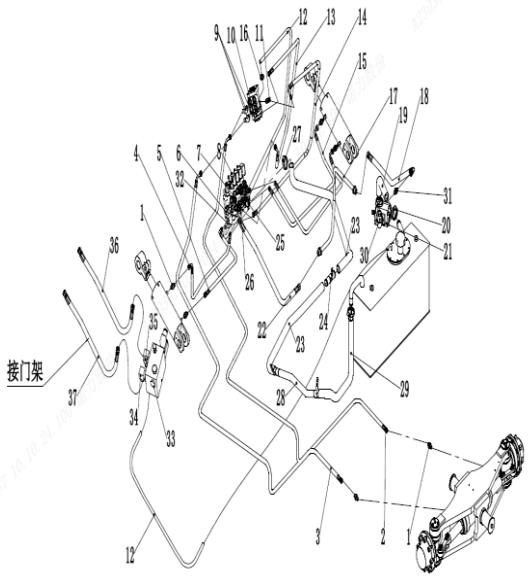


| 序号/NO | 编码/SN | 名称 | Name | 数量/QTY | 备注/Remark |
|---|---|---|---|---|---|
| 33 | 256524512001 | 安全功能阀 | | 1 | |
| 34 | 256523520036 | 接头(锁定弯)17-M30x2-M27x1.5-24° | | 2 | |
| 35 | 256523521002 | 接头(锁定弯)11-M16x1.5-0 | | 1 | |
| 36 | 256623529611 | 液压管总成(135°)18-L660-2SC-24°(带钢丝防护) | | 1 | |
| 37 | 256623529612 | 液压管总成(135°)18-L1000-2SC-24°(带钢丝防护) | | 1 | |

256698501029液压系统/Hydraulic system

| 序号/NO | 编码/SN | 名称 | Name | 数量/QTY | 备注/Remark |
|---|---|---|---|---|---|

| | | | | | |
|---|---|---|---|---|---|
| | | | | | |
| | | | | | |
| | | | | | |
| | | | | | |
| | | | | | |
| | | | | | |
| | | | | | |
| | | | | | |
| | | | | | |
| | | | | | |
| | | | | | |
| | | | | | |
| | | | | | |
| | | | | | |
| | | | | | |
| | | | | | |
| | | | | | |
| | | | | | |
| | | | | | |
| | | | | | |
| | | | | | |
| | | | | | |

## 256698501030 货叉/Fork

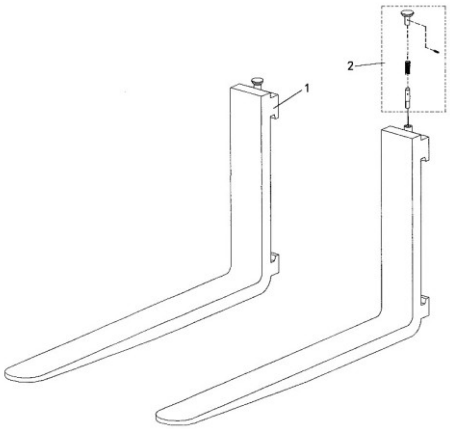


| 序号/NO | 编码/SN | 名称 | Name | 数量/QTY | 备注/Remark |
|---|---|---|---|---|---|
| A | 940100100111 | 挂钩ⅢA型货叉150x55x1070 | Fork 150x55x1070 | 2 | 50QL |
| | 940100100112 | 挂钩ⅢA型货叉150x55x1220 | Fork 150x55x1220 | 2 | 50QL |
| | 940100100113 | 挂钩ⅢA型货叉150x55x1370 | Fork 150x55x1370 | 2 | 50QL |
| | 940100100114 | 挂钩ⅢA型货叉150x55x1520 | Fork 150x55x1520 | 2 | 50QL |
| | 940100100115 | 挂钩ⅢA型货叉150x55x1670 | Fork 150x55x1670 | 2 | 50QL |
| | 940100100116 | 挂钩ⅢA型货叉150x55x1820 | Fork 150x55x1820 | 2 | 50QL |
| | 940100100117 | 挂钩ⅢA型货叉150x55x1970 | Fork 150x55x1970 | 2 | 50QL |
| | 940100100118 | 挂钩ⅢA型货叉150x55x2200 | Fork 150x55x2200 | 2 | 50QL |
| | 940100100125 | 挂钩ⅢA型货叉150x55x1200 | Fork 150x55x1200 | 2 | 50QL |
| | 940100100134 | 挂钩ⅢA型货叉150x55x1150 | Fork 150x55x1150 | 2 | 50QL |
| | 940100100209 | 挂钩ⅢA型货叉150x55x2440 | Fork 150x55x2440 | 2 | 50QL |
| A | 940100100126 | 挂钩ⅢA型货叉150x55x1070(3A全稍) | Fork 150x55x1070 | 2 | |
| | 940100100127 | 挂钩ⅢA型货叉150x55x1220(3A全稍) | Fork 150x55x1220 | 2 | |
| | 940100100128 | 挂钩ⅢA型货叉150x55x1370(3A全稍) | Fork 150x55x1370 | 2 | |
| | 940100100129 | 挂钩ⅢA型货叉150x55x1520(3A全稍) | Fork 150x55x1520 | 2 | |
| | 940100100130 | 挂钩ⅢA型货叉150x55x1670(3A全稍) | Fork 150x55x1670 | 2 | |
| | 940100100131 | 挂钩ⅢA型货叉150x55x1820(3A全稍) | Fork 150x55x1820 | 2 | |
| | 940100100132 | 挂钩ⅢA型货叉150x55x1970(3A全稍) | Fork 150x55x1970 | 2 | |
| | 940100100133 | 挂钩ⅢA型货叉150x55x2200(3A全稍) | Fork 150x55x2200 | 2 | |
| | 940100100127 | 挂钩ⅢA型货叉150x55x1150(3A全稍) | Fork 150x55x1150 | 2 | |
| 1 | ▲ | 货叉体 | Fork body | 2 | |
| 2 | 253098514101 | 提销总成 | Lift pin assembly | 2 | |



## 256698501031倾斜油缸/Tilt cylinder

| 序号/NO | 编码/SN | 名称 | Name | 数量/QTY | 备注/Remark |
|---|---|---|---|---|---|
| A | 256520510001 | 油缸(TL)Φ90xΦ45x121(6/10) | Oil cylinder(TL)Φ90xΦ45x121(6/10) | 1 | |
| | 256520510002 | 油缸(TL)Φ90xΦ45x90(6/6) | Oil cylinder(TL)Φ90xΦ45x90(6/6) | 1 | |
| | 256520510003 | 油缸(TL)Φ90xΦ45x68(3/6) | Oil cylinder(TL)Φ90xΦ45x68(3/6) | 1 | |
| B | 256520510004 | 油缸(RL)Φ90xΦ45x121(6/10) | Oil cylinder(RL)Φ90xΦ45x121(6/10) | 1 | |
| | 256520510005 | 油缸(RL)Φ90xΦ45x90(6/6) | Oil cylinder(RL)Φ90xΦ45x90(6/6) | 1 | |

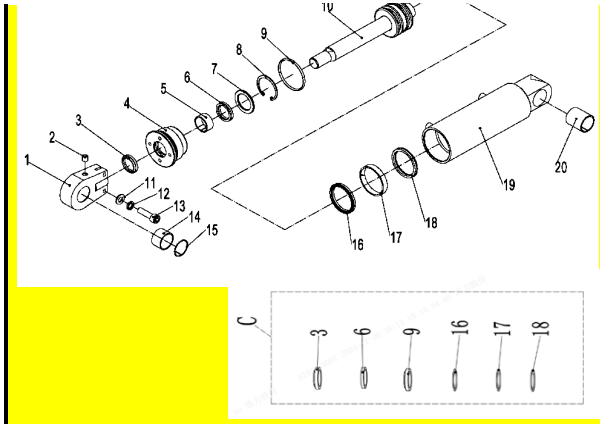

| | | | | | |
|---|---|---|---|---|---|
| | 256520510006 | 油缸(RL)Φ90xΦ45x68(3/6) | Oil cylinder(RL)Φ90xΦ45x68(3/6) | 1 | |
| 2 | ▲ | 直通式压注油嘴M10 | Grease mouth M10 | 1 | |
| 3 | ▲ | DH28x36x4.5x6 | DH28x36x4.5x6 | 1 | |
| 4 | ▲ | 导向套 | Guide sleeve | 1 | |
| 5 | ▲ | 钢背轴承28x32x15 | Bearing 28x32x15 | 1 | |
| 6 | ▲ | DH28x36x6 | DH28x36x6 | 1 | |
| 7 | ▲ | 挡片28x38x3 | Baffle 28x38x3 | 1 | |
| 8 | ▲ | 挡圈47 | Circlip 47 | 1 | |
| 9 | ▲ | O型圈d60x3.55 | O seal ring d60x3.55 | 1 | |
| 10 | ▲ | 活塞杆 | Piston body assembly | 1 | |
| 11 | ▲ | 平垫圈 | Washer | 1 | |
| 12 | ▲ | 弹簧垫圈 | Washer | 1 | |
| 13 | ▲ | 螺钉 | Screws | 1 | |
| 14 | ▲ | 关节轴承30ES | Bearing GE30ES | 1 | |
| 15 | ▲ | 挡圈 | Circlip | 1 | |
| 16 | ▲ | 孔用50x60x6 | Hole with 50x60x6 | 1 | |
| 17 | ▲ | 支承环55x60x10 | Support ring 55x60x10 | 1 | |
| 18 | ▲ | 孔用50x60x6 | Hole with 50x60x6 | 1 | |
| 19 | ▲ | 缸套 | Cylinder liner | 1 | |
| 20 | ▲ | 钢背轴承30x34x38 | Bearing 30x34x38 | 1 | |
| C | 256598510005 | 密封包(倾斜油缸) | Seal kits (tlited cylinder) | 1 | 包含3\6\9\16\17\18 |



**256698501032门架（标准门架）/Gantry (Standard gantry)**

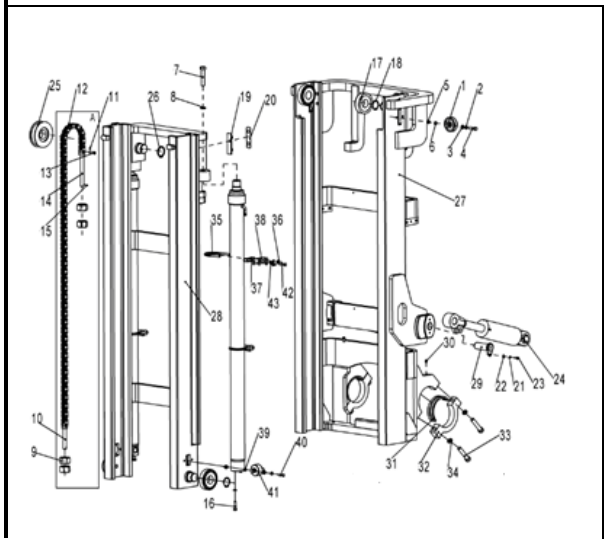

| 序号/NO | 编码/SN | 名称 | Name | 数量/QTY | 备注/Remark |
|---|---|---|---|---|---|
| A | 256544014001 | 起升链条LH1634-71 | Lifting chain LH1634-71 | 2 | H=2500 |
| | 256544014002 | 起升链条LH1634-75 | Lifting chain LH1634-75 | 2 | H=2700 |
| | 256544014003 | 起升链条LH1634-81 | Lifting chain LH1634-81 | 2 | H=3000 |
| | 256544014013 | 起升链条LH1634-85 | Lifting chain LH1634-85 | 2 | H=3300 |
| | 256544014005 | 起升链条LH1634-91 | Lifting chain LH1634-91 | 2 | H=3500 |
| | 256544014006 | 起升链条LH1634-93 | Lifting chain LH1634-93 | 2 | H=3600 |
| | 256544014007 | 起升链条LH1634-95 | Lifting chain LH1634-95 | 2 | H=3700 |
| | 256544014008 | 起升链条LH1634-103 | Lifting chain LH1634-103 | 2 | H=4000 |
| | 256544014009 | 起升链条LH1634-113 | Lifting chain LH1634-113 | 2 | H=4500 |
| | 256544014010 | 起升链条LH1634-117 | Lifting chain LH1634-117 | 2 | H=4700 |
| | 256544014011 | 起升链条LH1634-123 | Lifting chain LH1634-123 | 2 | H=5000 |
| | 256544014012 | 起升链条LH1634-145 | Lifting chain LH1634-145 | 2 | H=6000 |
| | 256144014011 | 起升链条LH1634-133 | Lifting chain LH1634-133 | 2 | H=5500 |
| 1 | 256844520001 | 侧滚轮Φ87-CD=55（偏心） | Side roller Φ87-CD=55 (eccentric) | 2 | |
| 2 | 910400500008 | 弹簧垫圈GB93-12 | Spring washer GB93-12 | 10 | |
| 3 | 910400100008 | 平垫圈GB97.1-12-200HV | Washer GB97.1-12-200HV | 8 | |
| 4 | 910100300052 | 螺栓GB5783-M12x40-8.8 | Bolt GB5783 M12x40-8.8 | 4 | |
| 5 | 256544020003 | 垫圈Φ20xΦ13x7 | Ring Φ20xΦ13x7 | 4 | |
| 6 | 256544020701 | 垫圈Φ20xΦ13x0.5 | Ring Φ20xΦ13x0.5 | 4 | |
| 7 | 910100400035 | 螺栓GB5786-M20x1.5x60-8.8 | Bolt GB5786-M20x1.5x60-8.8 | 2 | |

| | | | | | |
|---|---|---|---|---|---|
| 8 | 256544020710 | 垫圈Φ40xΦ21x0.8 | Ring Φ40xΦ21x0.8 | 2 | |
| 9 | 910300200007 | 螺母GB6171-M22x1.5-10 | Nuts GB6171-M22x1.5-10 | 4 | |
| 10 | 256544020705 | 链条螺栓M22x1.5x149 | Chain bolts M22x1.5x149 | 1 | |
| 11 | 910600600026 | 开口销GB91-3.2x20 | Pin GB91-3.2x20 | 2 | |
| 12 | 910900400015 | 板式链GB6074-LH1634 | Plate chain GB6074-LH1634 | 1 | |
| 13 | 256544020706 | 销轴Φ9.5x38 | Pin Φ9.5x38 | 2 | |
| 14 | 256544020707 | 链条螺栓M22x1.5x214 | Chain bolts M22x1.5x214 | 1 | |
| 15 | 910600600023 | 开口销GB91-3x40 | Pin GB91-3x40 | 2 | |
| 16 | 910100400013 | 螺栓GB5786-M12x1.25x45-8.8 | Bolt GB5786-M12x1.25x45-8.8 | 2 | |
| 17 | 940200100004 | 主滚轮Φ123xΦ50x34 | Main wheel Φ123xΦ50x34 | 4 | |
| 18 | 910401300024 | 轴用弹性挡圈GB894.1-50 | Elastic retaining ring GB894.1-50 for shaft | 4 | |



**256698501032门架（标准门架）/Gantry (Standard gantry)**

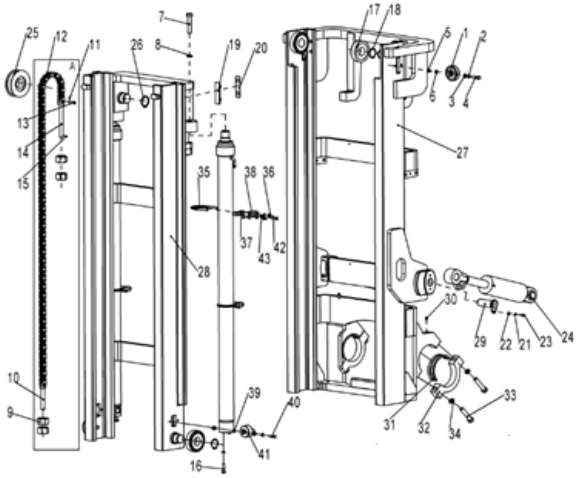


| 序号/NO | 编码/SN | 名称 | Name | 数量/QTY | 备注/Remark |
|---|---|---|---|---|---|
| 19 | 255044020131 | 垫板 | Shim Plate | 2 | |
| 20 | 255044020134 | 调整垫片t=0.2 | Adjusting pad t=0.2 | 4 | |
| | 255044020133 | 调整垫片t=0.5 | Adjusting pad t=0.5 | 4 | |
| | 255044020132 | 调整垫片t=0.8 | Adjusting pad t=0.8 | 4 | |
| 21 | 910400500007 | 弹簧垫圈GB93-10 | Washer GB93-10 | 4 | |
| 22 | 910400100007 | 平垫圈GB97.1-10-200HV | Washer GB97.1-10-200HV | 2 | |
| 23 | 910100300035 | 螺栓GB5783-M10x20-8.8 | Bolt GB5783-M10x20-8.8 | 2 | |
| 24 | 256544010002 | 带耳轴Φ40x70 | Axle Φ40x70 | 2 | |
| 25 | 940200500006 | 链轮轴承782311-Φ135xΦ55X34 | Chain wheel bearing 782311-Φ135xΦ55X34 | 1 | |
| 26 | 910401300026 | 轴用弹性挡圈GB894.1-55 | Circlip GB894.1-55 | 1 | |
| 27 | 256544011001 | 外门架(2500) | Outer mast 2500 | 1 | |
| | 256544011002 | 外门架(2700) | Outer mast 2700 | 1 | |
| | 256544011003 | 外门架(3000) | Outer mast 3000 | 1 | |
| | 256544011004 | 外门架(3300) | Outer mast 3300 | 1 | |
| | 256544011005 | 外门架(3500) | Outer mast 3500 | 1 | |
| | 256544011006 | 外门架(3600) | Outer mast 3600 | 1 | |
| | 256544011007 | 外门架(3700) | Outer mast 3700 | 1 | |
| | 256544011008 | 外门架(4000) | Outer mast 4000 | 1 | |
| | 256544011009 | 外门架(4500) | Outer mast 4500 | 1 | |
| | 256544011010 | 外门架(4700) | Outer mast 4700 | 1 | |
| | 256544011011 | 外门架(5000) | Outer mast 5000 | 1 | |
| | 256544011013 | 外门架(5500) | Outer mast 5500 | 1 | |
| | 256544011012 | 外门架(6000) | Outer mast 6000 | 1 | |
| 28 | 256544012001 | 内门架(2500) | Inner mast 2500 | 1 | |
| | 256544012002 | 内门架(2700) | Inner mast 2700 | 1 | |
| | 256544012003 | 内门架(3000) | Inner mast 3000 | 1 | |
| | 256544012004 | 内门架(3300) | Inner mast 3300 | 1 | |
| | 256544012005 | 内门架(3500) | Inner mast 3500 | 1 | |
| | 256544012006 | 内门架(3600) | Inner mast 3600 | 1 | |
| | 256544012007 | 内门架(3700) | Inner mast 3700 | 1 | |
| | 256544012008 | 内门架(4000) | Inner mast 4000 | 1 | |



**256698501032门架（标准门架）/Gantry (Standard gantry)**

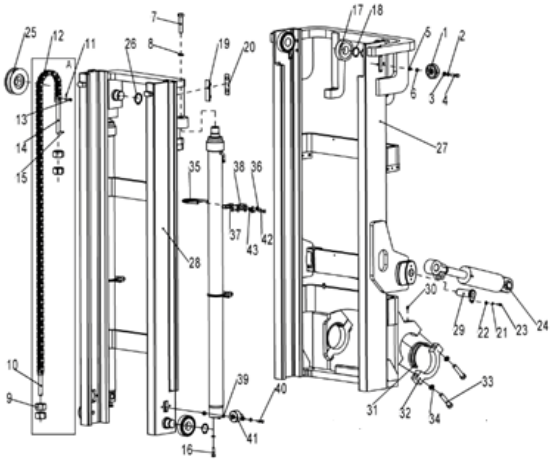

| 序号/NO | 编码/SN | 名称 | Name | 数量/QTY | 备注/Remark |
|---|---|---|---|---|---|
| 28 | 256544012009 | 内门架(4500) | Inner mast 4500 | 1 | |
| | 256544012010 | 内门架(4700) | Inner mast 4700 | 1 | |
| | 256544012011 | 内门架(5000) | Inner mast 5000 | 1 | |
| | 256544012013 | 内门架(5500) | Inner mast 5500 | 1 | |
| | 256544012012 | 内门架(6000) | Inner mast 6000 | 1 | |
| 29 | 256544010001 | 带耳轴Φ40x112 | With trunnion Φ 40x112 | 2 | |
| 30 | 911200100004 | 油杯JB7940.1-M10x1 | Oil cup JB7940.1-M10x1 | 2 | |
| 31 | 256544020009 | 轴瓦 | Bearing bush | 2 | |
| 32 | 256544020007 | 哈弗盖 | Haval cover | 2 | |
| 33 | 910100300088 | 螺栓GB5783-M20x100-8.8 | Bolt GB5783-M20x100-8.8 | 4 | |
| 34 | 910400500012 | 弹簧垫圈GB93-20 | Spring washer GB93-20 | 4 | |
| 35 | 256544020008 | U形螺栓Φ88 | U-bolt Φ eighty-eight | 2 | |
| 36 | 910300200002 | 螺母GB6171-M10x1.25-10 | Nut GB6171-M10x1.25-10 | 2 | |
| 37 | 256544020004 | 橡胶套 | Rubber sleeve | 2 | |
| 38 | 256544020005 | 固定座(油缸环座) | Fixed seat (cylinder ring seat) | 2 | |
| 39 | 256544020006 | 垫圈Φ20xΦ13x13 | Washer Φ 20x Φ 13x13 | 4 | |
| 40 | 910100100048 | 螺栓GB5782-M12x50-8.8 | Bolt GB5782-M12x50-8.8 | 4 | |
| 41 | 940200200001 | 侧滚轮Φ67-CD=65 | Side roller Φ 67-CD=65 | 2 | |
| 42 | 910100300041 | 螺栓GB5783-M10x50-8.8 | Bolt GB5783-M10x50-8.8 | 2 | |
| 43 | 910300100007 | 螺母GB6170-M10-10 | Nut GB6170-M10-10 | 2 | |



**256698501033货叉架（标准门架）/Fork rack (Standard gantry)**

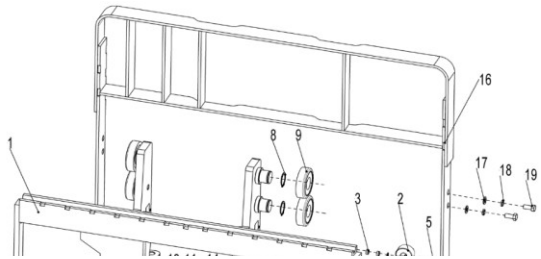

| 序号/NO | 编码/SN | 名称 | Name | 数量/QTY | 备注/Remark |
|---|---|---|---|---|---|
| 1 | 256538011001 | 货叉架焊合(二级标准) | Fork frame welding (secondary standard) | 1 | |
| 2 | 940200200001 | 侧滚轮Φ67-CD=65 | Side roller Φ 67-CD=65 | 2 | |
| 3 | 256544020701 | 垫圈Φ20xΦ13x0.5 | Washer Φ 20x Φ 13x0.5 | 4 | |
| 4 | 910400500008 | 弹簧垫圈GB93-12 | Spring washer GB93-12 | 4 | |
| 5 | 910400100008 | 平垫圈GB97.1-12-200HV | Plain washer GB97.1-12-200HV | 4 | |
| 6 | 910100300052 | 螺栓GB5783-M12x40-8.8 | Bolt GB5783-M12x40-8.8 | 4 | |
| 7 | 256544020003 | 垫圈Φ20xΦ13x7 | Washer Φ 20x Φ 13x7 | 8 | |
| 8 | 910401300024 | 轴用弹性挡圈GB894.1-50 | Circlip for shaft GB894.1-50 | 6 | |
| 9 | 940200100036 | 主滚轮Φ123.5xΦ50x34 | Main roller Φ 123.5x Φ 50x34 | 4 | |
| 10 | 940200100002 | 主滚轮Φ102xΦ35x25.5 | Main roller Φ 102x Φ 35x25.5 | 2 | |
| 11 | 910400100010 | 平垫圈GB97.1-16-200HV | Plain washer GB97.1-16-200HV | 4 | |
| 12 | 910400500010 | 弹簧垫圈GB93-16 | Spring washer GB93-16 | 4 | |
| 13 | 910100100072 | 螺栓GB5782-M16x60-8.8 | Bolt GB5782-M16x60-8.8 | 4 | |
| 14 | 263044020040 | 侧滚轮轴Φ35x51 | Side roller shaft Φ 35x51 | 2 | |

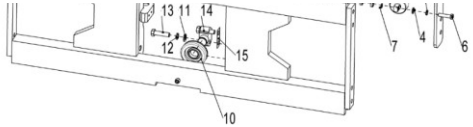


| | | | | | |
|---|---|---|---|---|---|
| 15 | 256538020701 | 垫圈Φ80xΦ30x0.5 | Washer Φ 80x Φ 30x0.5 | 2 | |
| 16 | 256540511001 | 挡货架焊合(1380x1130) | Welding of retaining rack (1380x1130) | 1 | |
| 17 | 910400100008 | 平垫圈GB97.1-12-200HV | Plain washer GB97.1-12-200HV | 4 | |
| 18 | 910400500008 | 弹簧垫圈GB93-12 | Spring washer GB93-12 | 4 | |
| 19 | 910100300050 | 螺栓GB5783-M12x30-8.8 | Bolt GB5783-M12x30-8.8 | 4 | |



**256698501034起升管路（标准门架）/Lifting pipeline (Standard gantry)**

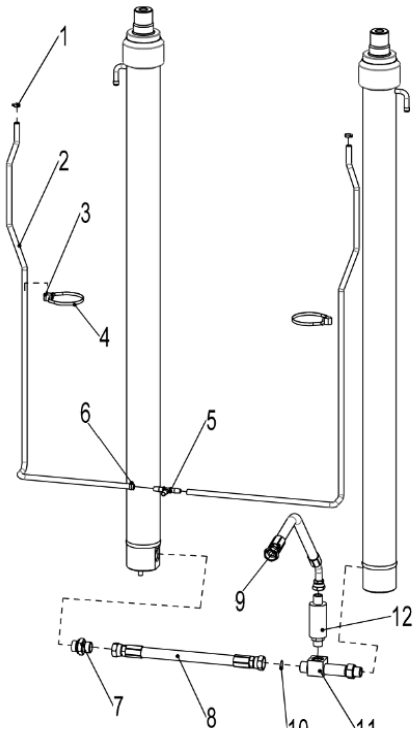


| 序号/NO | 编码/SN | 名称 | Name | 数量/QTY | 备注/Remark |
|---|---|---|---|---|---|
| 1 | 255044020043 | 卡箍13 | Clamp 13 | 4 | |
| 2 | 900200301004 | PE软管Φ10xΦ13 | PE hose Φ 10x Φ thirteen | 1 | |
| 3 | 921600400001 | 扎带4x250 | Ties 4x250 | 4 | |
| 4 | 255044020042 | 压板 | Platen | 4 | |
| 5 | 255044020118 | 接头(三通) | Connector (tee) | 1 | |
| 6 | 921600400003 | 扎带(带扣)P-N156-00646 | Tie (buckle) P-N156-00646 | 2 | |
| 7 | 257044529001 | 接头16-2xM27x1.5-24° | Fitting 16-2xM27x1.5-24° | 1 | |
| 8 | 256644029601 | 液压管总成(直)18-L375-2SC-24° | Hydraulic Hose Assembly (straight) 18-L375-2SC-24° | 1 | |
| 9 | 256644029600 | 液压管总成(45°)18-L800-2SC-24°带钢丝防护 | Hydraulic hose assembly (45°) 18-L800-2SC-24° with wire | 1 | |
| 10 | 910800100040 | O形圈-外24x2.4 | O-ring - outer 24x2.4 | 1 | |
| 11 | 256544029007 | 限速阀三通 | Three-way of speed limit valve | 1 | |
| 12 | 256544019002 | 限速阀 | Speed limiting valve | 1 | |

| | | | | | |
|---|---|---|---|---|---|
| | | | | | |
| | | | | | |
| | | | | | |



**256698501035起升油缸（标准门架）/Lifting cylinder (Standard gantry)**

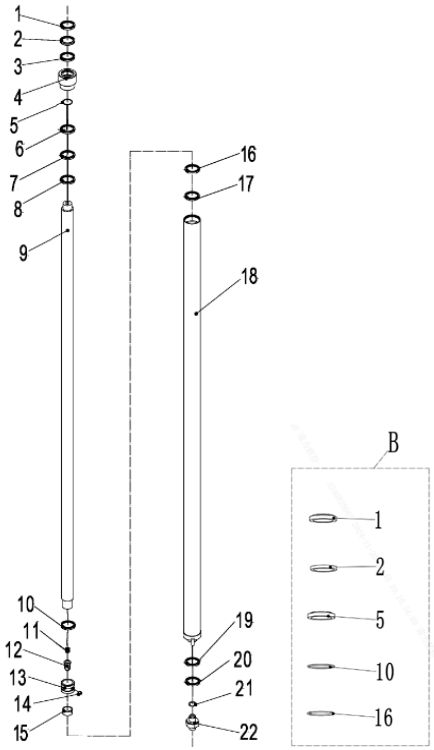


| 序号/NO | 编码/SN | 名称 | Name | 数量/QTY | 备注/Remark |
|---|---|---|---|---|---|
| A | 256544016001 | 油缸Φ70xΦ50x1245 | Lifting cylinder Φ70xΦ50x1245 | 2 | H=2500 |
| | 256544016002 | 油缸Φ70xΦ50x1345 | Lifting cylinder Φ70xΦ50x1345 | 2 | H=2700 |
| | 256544016003 | 油缸Φ70xΦ50x1495 | Lifting cylinder Φ70xΦ50x1495 | 2 | H=3000 |
| | 256544016004 | 油缸Φ70xΦ50x1645 | Lifting cylinder Φ70xΦ50x1645 | 2 | H=3300 |
| | 256544016005 | 油缸Φ70xΦ50x1745 | Lifting cylinder Φ70xΦ50x1745 | 2 | H=3500 |
| | 256544016006 | 油缸Φ70xΦ50x1795 | Lifting cylinder Φ70xΦ50x1795 | 2 | H=3600 |
| | 256544016007 | 油缸Φ70xΦ50x1845 | Lifting cylinder Φ70xΦ50x1845 | 2 | H=3700 |
| | 256544016008 | 油缸Φ70xΦ50x1995 | Lifting cylinder Φ70xΦ50x1995 | 2 | H=4000 |
| | 256544016009 | 油缸Φ70xΦ50x2245 | Lifting cylinder Φ70xΦ50x2245 | 2 | H=4500 |
| | 256544016010 | 油缸Φ70xΦ50x2345 | Lifting cylinder Φ70xΦ50x2345 | 2 | H=4700 |
| | 256544016011 | 油缸Φ70xΦ50x2495 | Lifting cylinder Φ70xΦ50x2495 | 2 | H=5000 |
| | 256544016012 | 油缸Φ70xΦ50x2995 | Lifting cylinder Φ70xΦ50x2995 | 2 | H=6000 |
| | 256544016013 | 油缸Φ70xΦ50x2745 | Lifting cylinder Φ70xΦ50x2745 | 2 | H=5500 |
| 1 | ▲ | 骨架防尘圈 DKB 50×62×7/10 | Dust Ring DKB 50 × 62 × 7/10 | 1 | |
| 2 | ▲ | 轴封 D2 50×60×6 | Shaft seal D 250 × 60 × 6 | 1 | |
| 3 | ▲ | 导向套 | Guide sleeve | 1 | |
| 4 | ▲ | 缸盖 | Cylinder head | 1 | |
| 5 | ▲ | O形橡胶密封圈 80×3.55 | O-ring 80×3.55 | 1 | |
| 6 | ▲ | 钢背轴承 SF-1/Ø55×Ø50×27 | Steel back bearing SF-1/Ø55×Ø50×27 | 1 | |
| 7 | ▲ | 开槽平端紧定螺钉 M8×8 | Slotted set screws with flat end M8×8 | 1 | |
| 8 | ▲ | 尼龙垫 Ø6×3 | Nylon Mat Ø6×3 | 1 | |
| 9 | ▲ | 活塞杆 | Piston rod | 1 | |
| 10 | ▲ | O形橡胶密封圈（内 50X2） | O-ring （50X2） | 1 | |
| 11 | ▲ | 调整套 | Adjustment set | 2 | |
| 12 | ▲ | 轴用钢丝挡圈 Ø34×Ø2 | Steel wire collar for shaft Ø34×Ø2 | 1 | |
| 13 | ▲ | 活塞 | Piston | 1 | |
| 14 | ▲ | 孔用支承环 D 70×25×2.5 | Support rings for holes D 70×25×2.5 | 1 | |
| 15 | ▲ | 缓冲套 | Buffer Sleeve | 1 | |
| 16 | ▲ | 孔封 OSI70×60×6 | Hole seal OSI70×60×6 | 1 | |
| 17 | ▲ | 挡圈 Ø60×Ø70×3 | Retaining ring Ø60×Ø70×3 | 1 | |
| 18 | ▲ | 缸体总成 | Block assembly | 1 | |



**256698501035起升油缸（标准门架）/Lifting cylinder (Standard gantry)**

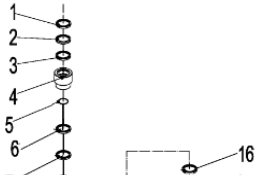


| 序号/NO | 编码/SN | 名称 | Name | 数量/QTY | 备注/Remark |
|---|---|---|---|---|---|
| 19 | ▲ | 钢丝挡圈Ø27×Ø2.5 | Steel wire retaining ring Ø27×Ø2.5 | 1 | |
| 20 | ▲ | 弹簧Ø17.3×Ø2.3×48.5 | Spring Ø17.3×Ø2.3×48.5 | 1 | |
| 21 | ▲ | 圆柱销 10×25 | Pin 10×25 | 1 | |
| 22 | ▲ | 阀芯Ø23×31六孔Ø 5.2 | The valve core ø23 × 31 six-hole ø5.2 | 1 | |
| B | 256598510006 | 密封件修理包(起升缸) | Seal kits | **1** | 包含1.2.5.10.16 |
| | | | | | |
| | | | | | |

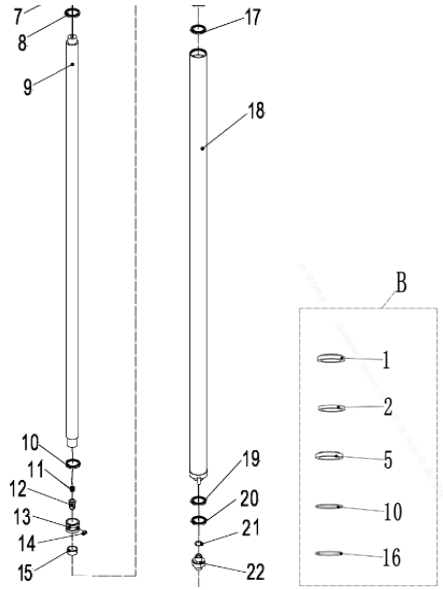




**256698501036侧移器及管路安装（标准门架）/Side shifter and pipeline installation (Standard gantry)**

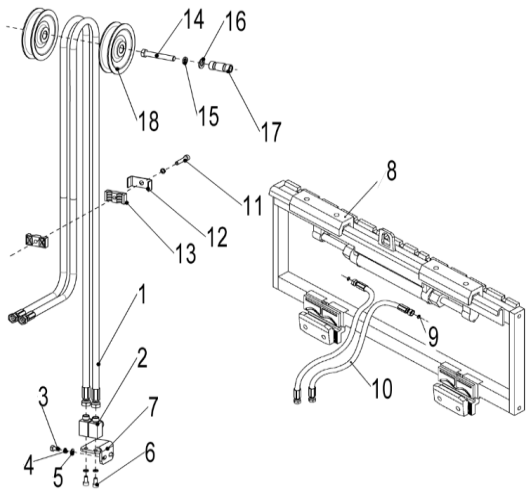


| 序号/NO | 编码/SN | 名称 | Name | 数量/QTY | 备注/Remark |
|---|---|---|---|---|---|
| 1 | 256627529601 | 液压管总成（直）10-L3300-1SC-24° | Hydraulic Tube Assembly (Straight) 10-L3300-1SC-24° | 2 | H=2500 |
| | 256627529602 | 液压管总成（直）10-L3510-1SC-24° | Hydraulic Hose Assembly (Straight) 10-L3510-1SC-24° | 2 | H=2700 |
| | 256627529603 | 液压管总成（直）10-L3800-1SC-24° | Hydraulic Hose Assembly (straight) 10-L3800-1SC-24° | 2 | H=3000 |
| | 256627529604 | 液压管总成（直）10-L4110-1SC-24° | Hydraulic Hose Assembly (straight) 10-L4110-1SC-24° | 2 | H=3300 |
| | 256627529605 | 液压管总成（直）10-L4300-1SC-24° | Hydraulic Hose Assembly (Straight) 10-L4300-1SC-24° | 2 | H=3500 |
| | 256627529606 | 液压管总成（直）10-L4400-1SC-24° | Hydraulic Tube Assembly (Straight) 10-L4400-1SC-24° | 2 | H=3600 |
| | 256627529607 | 液压管总成（直）10-L4500-1SC-24° | Hydraulic Tube Assembly (Straight) 10-L4500-1SC-24° | 2 | H=3700 |
| | 256627529608 | 液压管总成（直）10-L4900-1SC-24° | Hydraulic Hose Assembly (Straight) 10-L4900-1SC-24° | 2 | H=4000 |
| | 256627529609 | 液压管总成（直）10-L5400-1SC-24° | Hydraulic Tube Assembly (Straight) 10-L5400-1SC-24° | 2 | H=4500 |
| | 256627529610 | 液压管总成（直）10-L5600-1SC-24° | Hydraulic Hose Assembly (straight) 10-L5600-1SC-24° | 2 | H=4700 |
| | 256627529611 | 液压管总成（直）10-L5900-1SC-24° | Hydraulic Tube Assembly (Straight) 10-L5900-1SC-24° | 2 | H=5000 |
| | 256627529612 | 液压管总成（直）10-L6400-1SC-24° | Hydraulic Tube Assembly (Straight) 10-L6400-1SC-24° | 2 | H=5500 |
| | 256627529613 | 液压管总成（直）10-L7000-1SC-24° | Hydraulic Hose Assembly (Straight) 10-L7000-1SC-24° | 2 | H=6000 |
| 2 | 251230520010 | 接头(锁定弯)8-2xM16x1.5-24° | Fitting (Locking Bend) 8-2xM16x1.5-24° | 2 | |
| 3 | 910100300020 | 螺栓GB5783-M8x16-8.8 | Bolt GB5783-M8x16-8.8 | 2 | |
| 4 | 910400500006 | 弹簧垫圈GB93-8 | Spring washer GB93-8 | 6 | |
| 5 | 910400100006 | 平垫圈GB97.1-8-200HV | Plain washer GB97.1-8-200HV | 4 | |
| 6 | 910200200055 | 螺钉GB70.1-M8x16-8.8 | Screw GB70.1-M8x16-8.8 | 2 | |
| 7 | 256527520001 | 支架（右） | Bracket (right) | 1 | |
| 8 | 272042510001 | 侧移器总成(联动) | Side shifter assembly (linkage) | 1 | |
| 9 | 910800100042 | O形圈-外13.6x2.4 | O-ring - inner 13.6x2.4 | 2 | |
| 10 | 256539529601 | 液压管总成(90°)10-L400-1SC-24°-0° | Hydraulic Hose Assembly (90°) 10-L400-1SC-24°-0° | 2 | |

| | | | | | |
|---|---|---|---|---|---|
| 11 | 910200200062 | 螺钉GB70.1-M8x45-8.8 | Screw GB70.1-M8x45-8.8 | 2 | |
| 12 | 255028520035 | 安装板(管夹) | Mounting plate (pipe clamp) | 2 | |
| 13 | 255028520034 | 胶管固定块 | Rubber hose fixing block | 4 | |
| 14 | 910100100054 | 螺栓GB5782-M12x80-8.8 | Bolt GB5782-M12x80-8.8 | 2 | |
| 15 | 910400500008 | 弹簧垫圈GB93-12 | Spring washer GB93-12 | 2 | |
| 16 | 910400100008 | 平垫圈GB97.1-12-200HV | Plain washer GB97.1-12-200HV | 2 | |
| 17 | 255030520022 | 衬套Φ20xΦ13x56 | Bushing Φ 20x Φ 13x56 | 1 | |
| 18 | 255030520021 | 滑轮Φ110x27(单槽) | Pulley Φ 110x27 (single slot) | 2 | |
| | | | | | |



**256698501037门架（二级全自由门架）/Gantry (Two-stage full-free gantry)**

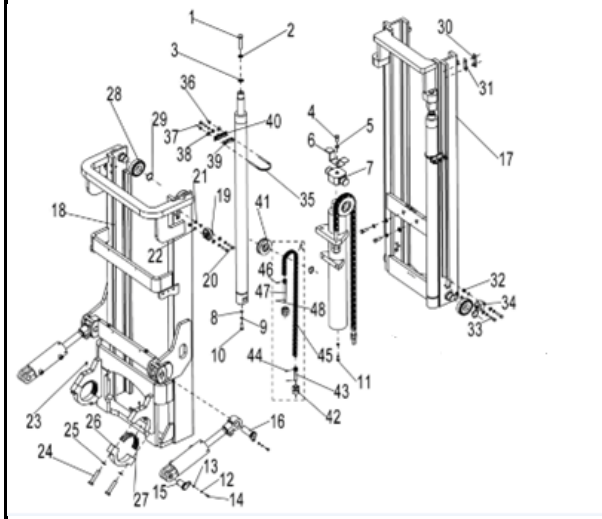


| 序号/NO | 编码/SN | 名称 | Name | 数量/QTY | 备注/Remark |
|---|---|---|---|---|---|
| 1 | 910100400035 | 螺栓GB5786-M20x1.5x60-8.8 | Bolt GB5786-M20x1.5x60-8.8 | 2 | |
| 2 | 910400500012 | 弹簧垫圈GB93-20 | Spring washer GB93-20 | 4 | |
| 3 | 256544020710 | 垫圈Φ40xΦ21x0.8 | Washer Φ40xΦ21x0.8 | 2 | |
| | 256544020711 | 垫圈Φ40xΦ21x0.5 | Washer Φ40xΦ21x0.5 | 2 | |
| | 256544020712 | 垫圈Φ40xΦ21x0.2 | Washer Φ40xΦ21x0.2 | 2 | |
| 4 | 910100300071 | 螺栓GB5783-M16x45-8.8 | Bolt GB5783-M16x45-8.8 | 4 | |
| 5 | 910400500010 | 弹簧垫圈GB93-16 | Spring washer GB93-16 | 4 | |
| 6 | 256544520001 | 挡板(链条) | Chain plate | 1 | |
| 7 | 256544520002 | 链轮座 | Sprocket seat | 1 | |
| 8 | 910100400013 | 螺栓GB5786-M12x1.25x45-8.8 | Bolt GB5786-M12x1.25x45-8.8 | 2 | |
| 9 | 910400500008 | 弹簧垫圈GB93-12 | Spring washer GB93-12 | 10 | |
| 10 | 910400100008 | 平垫圈GB97.1-12-200HV | Plain washers GB97.1-12-200HV | 8 | |
| 11 | 910100400010 | 螺栓GB5786-M12x1.25x30-8.8 | Bolt GB5786-M12x1.25x30-8.8 | 1 | |
| 12 | 910400500007 | 弹簧垫圈GB93-10 | Spring washer GB93-10 | 12 | |
| 13 | 910400100007 | 平垫圈GB97.1-10-200HV | Plain washers GB97.1-10-200HV | 12 | |
| 14 | 910100300035 | 螺栓GB5783-M10x20-8.8 | Bolt GB5783-M10x20-8.8 | 4 | |
| 15 | 256544010002 | 带耳轴Φ40x70 | Axle Φ40x70 | 2 | |
| 16 | 256544010001 | 带耳轴Φ40x112 | Axle Φ40x112 | 2 | |
| 17 | 256543512001 | 内门架焊合(2500) | Inner mast(2500) | 1 | H=2500 |
| | 256543512002 | 内门架焊合(2700) | Inner mast(2700) | 1 | H=2700 |
| | 256543512003 | 内门架焊合(3000) | Inner mast(3000) | 1 | H=3000 |
| | 256543512004 | 内门架焊合(3300) | Inner mast(3300) | 1 | H=3300 |
| | 256543512005 | 内门架焊合(3500) | Inner mast(3500) | 1 | H=3500 |
| | 256543512006 | 内门架焊合(3600) | Inner mast(3600) | 1 | H=3600 |
| | 256543512007 | 内门架焊合(3700) | Inner mast(3700) | 1 | H=3700 |
| | 256543512008 | 内门架焊合(4000) | Inner mast(4000) | 1 | H=4000 |
| 18 | 256543511001 | 外门架焊合(2500) | Outer mast(2500) | 1 | H=2500 |
| | 256543511002 | 外门架焊合(2700) | Outer mast(2700) | 1 | H=2700 |
| | 256543511003 | 外门架焊合(3000) | Outer mast(3000) | 1 | H=3000 |
| | 256543511004 | 外门架焊合(3300) | Outer mast(3300) | 1 | H=3300 |
| | 256543511005 | 外门架焊合(3500) | Outer mast(3500) | 1 | H=3500 |



**256698501037门架（二级全自由门架）/Gantry (Two-stage full-free gantry)**

| 序号/NO | 编码/SN | 名称 | Name | 数量/QTY | 备注/Remark |
|---|---|---|---|---|---|
| | 256543511006 | 外门架焊合(3600) | Outer mast(3600) | 1 | H=3600 |

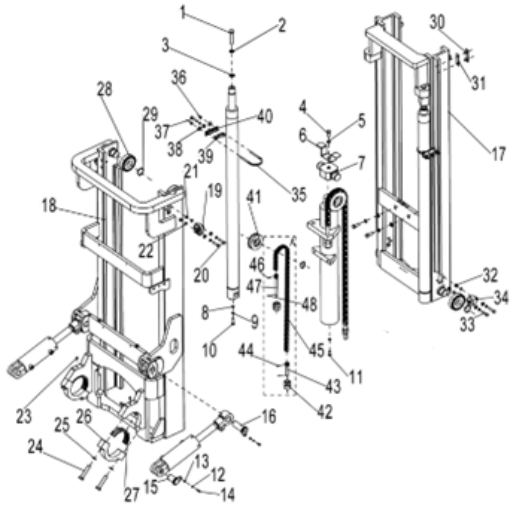

| | | | | | |
|---|---|---|---|---|---|
| 18 | 256543511007 | 外门架焊合(3700) | Outer mast(3700) | 1 | H=3700 |
| | 256543511008 | 外门架焊合(4000) | Outer mast(4000) | 1 | H=4000 |
| 19 | 256844520001 | 侧滚轮Φ87-CD=55（偏心） | Side roller Φ87-CD=55 (eccentric) | 2 | |
| 20 | 910100300052 | 螺栓GB5783-M12x40-8.8 | Bolt GB5783-M12x40-8.8 | 4 | |
| 21 | 256544020003 | 垫圈Φ20xΦ13x7 | Washer Φ20xΦ13x7 | 4 | |
| 22 | 256544020701 | 垫圈Φ20xΦ13x0.5 | Washer Φ20xΦ13x0.5 | 4 | |
| | 256544020702 | 垫圈Φ20xΦ13x1 | Washer Φ20xΦ13x1 | 4 | |
| 23 | 911200100004 | 油杯JB7940.1-M10x1 | Oil Cup JB7940.1-M10x1 | 2 | |
| 24 | 910100200021 | 螺栓GB5785-M20x1.5x100-8.8 | Bolt GB5785-M20x1.5x100-8.8 | 2 | |
| 25 | 910400500012 | 弹簧垫圈GB93-20 | Spring washers GB93-20 | 4 | |
| 26 | 256544020007 | 哈弗盖 | Haverguy | 2 | |
| 27 | 256544020009 | 轴瓦 | Bearing bush | 2 | |
| 28 | 940200100004 | 主滚轮Φ123xΦ50x34 | Main wheel Φ123xΦ50x34 | 4 | |
| 29 | 910401300024 | 轴用弹性挡圈GB894.1-50 | Elastic retaining ring GB894.1-50 for shaft | 4 | |
| 30 | 255044020131 | 垫板 | Shim Plate | 2 | |
| 31 | 255044020133 | 调整垫片t=0.5 | Adjusting gasket t = 0.5 | 4 | |
| 32 | 256544020006 | 垫圈Φ20xΦ13x13 | ring Φ20xΦ13x7 | 4 | |
| 33 | 910100100048 | 螺栓GB5782-M12x50-8.8 | Bolt GB5782-M12x50-8.8 | 4 | |
| 34 | 940200200001 | 侧滚轮Φ67-CD=65 | Side roller Φ67-CD=65 | 2 | |
| 35 | 256544020008 | U形螺栓Φ88 | U-bolt Φ88 | 2 | |
| 36 | 910300200002 | 螺母GB6171-M10x1.25-10 | Nuts GB6171-M10X1.25-10 | 2 | |
| 37 | 910100300055 | 螺栓GB5783-M12x55-8.8 | Bolt GB5783-M12x55-8.8 | 2 | |
| 38 | 910300100008 | 螺母GB6170-M12-10 | Nuts GB6170-M12-10 | 2 | |
| 39 | 256544020004 | 橡胶套 | Rubber sleeve | 2 | |
| 40 | 256544020005 | 固定座(油缸环座) | Fixed seat (cylinder ring seat) | 2 | |
| 41 | 940200500006 | 链轮轴承782311-Φ135xΦ55x34 | Sprocket bearings 782311-Φ135xΦ55x34 | 2 | |
| 42 | 910300200007 | 螺母GB6171-M22x1.5-10 | Nuts GB6171-M22x1.5-10 | 4 | |
| 43 | 256544020705 | 链条螺栓M22x1.5x149 | Chain bolts M22x1.5x149 | 1 | |
| 44 | 910600600026 | 开口销GB91-3.2x20 | Pin GB91-3.2x20 | 2 | |
| 45 | ▲ | 板式链GB6074-LH1634 | Plate chain GB6074-LH1634 | 1 | |



**256698501037门架（二级全自由门架）/Gantry (Two-stage full-free gantry)**

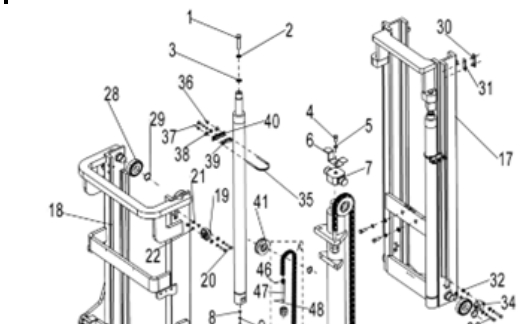

| 序号/NO | 编码/SN | 名称 | Name | 数量/QTY | 备注/Remark |
|---|---|---|---|---|---|
| 46 | 256544020706 | 销轴Φ9.5x38 | Pin Φ9.5x38 | 2 | |
| 47 | 256544020707 | 链条螺栓M22x1.5x214 | Chain bolts M22x1.5x214 | 1 | |
| 48 | 910600600023 | 开口销GB91-3x40 | Pin GB91-3.2x40 | 2 | |
| A | 256543515001 | 起升链条LH1634-53 | Lifting chain LH1634-53 | 2 | H=2500 |
| | 256544515003 | 起升链条LH1634-57 | Lifting chain LH1634-57 | 2 | H=2700 |
| | 256544515004 | 起升链条LH1634-59 | Lifting chain LH1634-59 | 2 | H=3000 |
| | 256543515002 | 起升链条LH1634-61 | Lifting chain LH1634-61 | 2 | H=3300 |
| | 256543515003 | 起升链条LH1634-65 | Lifting chain LH1634-65 | 2 | H=3500/3600 |
| | 256544515006 | 起升链条LH1634-67 | Lifting chain LH1634-67 | 2 | H=3700 |
| | 256544515007 | 起升链条LH1634-69 | Lifting chain LH1634-69 | 2 | H=4000 |

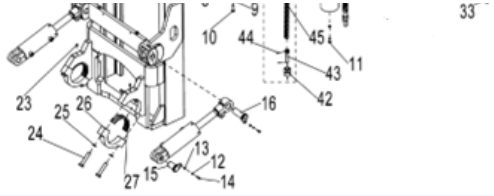




**256698501038货叉架（二级全自由门架）/Fork rack (Two-stage full-free gantry)**

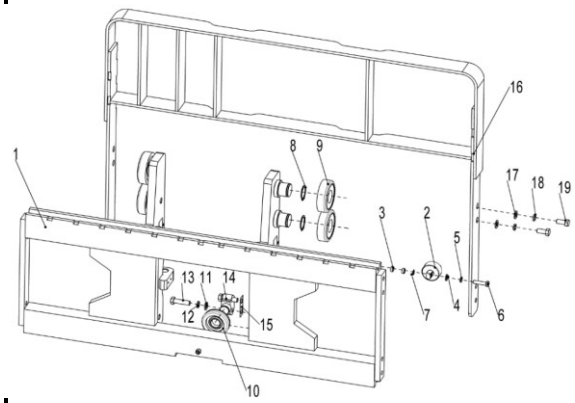


| 序号/NO | 编码/SN | 名称 | Name | 数量/QTY | 备注/Remark |
|---|---|---|---|---|---|
| 1 | 256538012001 | 货叉架焊合(二级全自由) | Fork frame welding (secondary full freedom) | 1 | |
| 2 | 940200200001 | 侧滚轮Φ67-CD=65 | Side roller Φ 67-CD=65 | 2 | |
| 3 | 256544020701 | 垫圈Φ20xΦ13x0.5 | Washer Φ 20x Φ 13x0.5 | 4 | |
| 4 | 910400500008 | 弹簧垫圈GB93-12 | Spring washer GB93-12 | 4 | |
| 5 | 910400100008 | 平垫圈GB97.1-12-200HV | Plain washer GB97.1-12-200HV | 4 | |
| 6 | 910100300052 | 螺栓GB5783-M12x40-8.8 | Bolt GB5783-M12x40-8.8 | 4 | |
| 7 | 256544020003 | 垫圈Φ20xΦ13x7 | Washer Φ 20x Φ 13x7 | 8 | |
| 8 | 910401300024 | 轴用弹性挡圈GB894.1-50 | Circlip for shaft GB894.1-50 | 6 | |
| 9 | 940200100036 | 主滚轮Φ123.5xΦ50x34 | Main roller Φ 123.5x Φ 50x34 | 4 | |
| 10 | 940200100002 | 主滚轮Φ102xΦ35x25.5 | Main roller Φ 102x Φ 35x25.5 | 2 | |
| 11 | 910400100010 | 平垫圈GB97.1-16-200HV | Plain washer GB97.1-16-200HV | 4 | |
| 12 | 910400500010 | 弹簧垫圈GB93-16 | Spring washer GB93-16 | 4 | |
| 13 | 910100100072 | 螺栓GB5782-M16x60-8.8 | Bolt GB5782-M16x60-8.8 | 4 | |
| 14 | 263044020040 | 侧滚轮轴Φ35x51 | Side roller shaft Φ 35x51 | 2 | |
| 15 | 256538020701 | 垫圈Φ80xΦ30x0.5 | Washer Φ 80x Φ 30x0.5 | 2 | |
| 16 | 256540511001 | 挡货架焊合(1380x1130) | Welding of retaining rack (1380x1130) | 1 | |
| 17 | 910400100008 | 平垫圈GB97.1-12-200HV | Plain washer GB97.1-12-200HV | 4 | |
| 18 | 910400500008 | 弹簧垫圈GB93-12 | Spring washer GB93-12 | 4 | |
| 19 | 910100300050 | 螺栓GB5783-M12x30-8.8 | Bolt GB5783-M12x30-8.8 | 4 | |

## 256698501039起升管路（二级全自由门架）/Lifting pipeline (Two-stage full-free gantry)

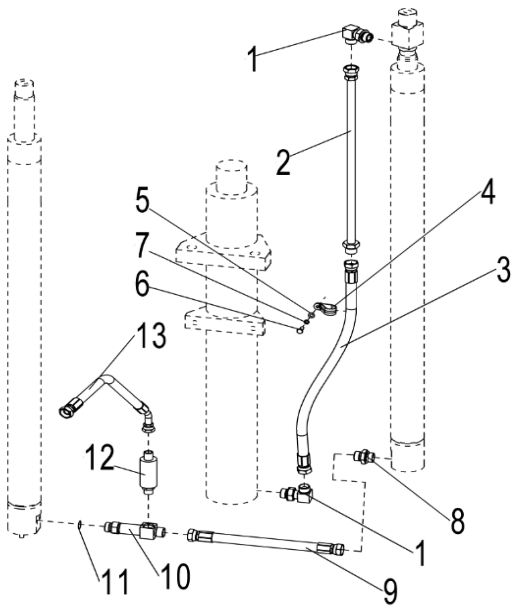


| 序号/NO | 编码/SN | 名称 | Name | 数量/QTY | 备注/Remark |
|---|---|---|---|---|---|
| 1 | 257044529007 | 接头(锁定弯)16-M27x2-M27x1.5-24° | Fittings (locking bend) 16-M27x2-M27x1.5-24° | 2 | |
| 2 | 256543519506 | 液压钢管焊合(24°)L=904 | Hydraulic Pipe Weld (24°) L=904 | 1 | H=2500/2700 |
| | 256543519507 | 液压钢管焊合(24°)L=954 | Hydraulic Pipe Weld (24°) L=954 | 1 | H=3000/3300 |
| | 256543519508 | 液压钢管焊合(24°)L=1154 | Hydraulic Pipe Weld (24°) L=1154 | 1 | H=3500 |
| | 256543519509 | 液压钢管焊合(24°)L=1454 | Hydraulic Pipe Weld (24°) L=1454 | 1 | H=3600/3700 |
| | 256543519510 | 液压钢管焊合(24°)L=1654 | Hydraulic Pipe Weld (24°) L=1654 | 1 | H=4000 |
| 3 | 256643529601 | 液压管总成（直）18-L570-2SC-24° | Hydraulic Tube Assembly (Straight) 18-L570-2SC-24° | 1 | H=2500 |
| | 256643529602 | 液压管总成（直）18-L630-2SC-24° | Hydraulic Tube Assembly (straight) 18-L630-2SC-24° | 1 | H=2700 |
| | 256643529603 | 液压管总成（直）18-L730-2SC-24° | Hydraulic Hose Assembly (straight) 18-L730-2SC-24° | 1 | H=3000 |
| | 256643529604 | 液压管总成（直）18-L880-2SC-24° | Hydraulic Hose Assembly (straight) 18-L880-2SC-24° | 1 | H=3300 |
| | 256643529605 | 液压管总成（直）18-L780-2SC-24° | Hydraulic Hose Assembly (straight) 18-L780-2SC-24° | 1 | H=3500 |
| | 256643529606 | 液压管总成（直）18-L530-2SC-24° | Hydraulic Hose Assembly (Straight) 18-L530-2SC-24° | 1 | H=3600 |
| | 256643529607 | 液压管总成（直）18-L580-2SC-24° | Hydraulic Hose Assembly (Straight) 18-L580-2SC-24° | 1 | H=3700/4000 |
| 4 | 951000100004 | 管夹YGE包胶26 | Pipe clamp YGE rubber coating 26 | 1 | |
| 5 | 910400100006 | 平垫圈GB97.1-8-200HV | Plain washer GB97.1-8-200HV | 1 | |
| 6 | 910100300023 | 螺栓GB5783-M8x25-8.8 | Bolt GB5783-M8x25-8.8 | 1 | |
| 7 | 910400500006 | 弹簧垫圈GB93-8 | Spring washer GB93-8 | 1 | |
| 8 | 256543519002 | 138切断阀总成 | 138 Shutoff Valve Assembly | 1 | |
| 9 | 256644029601 | 液压管总成(直)18-L375-2SC-24° | Hydraulic Hose Assembly (Straight) 18-L375-2SC-24° | 1 | |
| 10 | 256544029007 | 限速阀三通 | Speed Limiting Valve Tee | 1 | |
| 11 | 910800100040 | O形圈-外24x2.4 | O-Ring-Outside 24x2.4 | 1 | |
| 12 | 256544019002 | 限速阀 | Speed Limiting Valve | 1 | |
| 13 | 256644029600 | 液压管总成(45°)18-L800-2SC-24°带钢丝防护 | Hydraulic Hose Assembly (45°) 18-L800-2SC-24° with Wire G | 1 | |



## 256698501040短升降缸（二级全自由）/Short Lifting cylinder (Secondary full freedom)

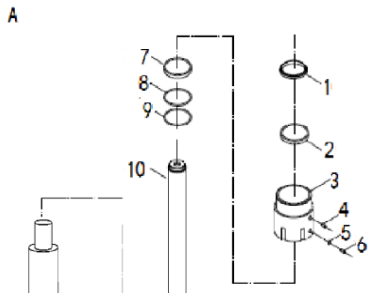


| 序号/NO | 编码/SN | 名称 | Name | 数量/QTY | 备注/Remark |
|---|---|---|---|---|---|
| A | 256544518001 | 油缸(M)Φ110xΦ90x637 | Lifting cylinder (M)Φ110xΦ90x637 | 1 | H=2500 |
| | 256544518002 | 油缸(M)Φ110xΦ90x687 | Lifting cylinder (M)Φ110xΦ90x687 | 1 | H=2700 |
| | 256544518004 | 油缸(M)Φ110xΦ90x772 | Lifting cylinder (M)Φ110xΦ90x772 | 1 | H=3000 |
| | 256544518006 | 油缸(M)Φ110xΦ90x857 | Lifting cylinder (M)Φ110xΦ90x857 | 1 | H=3300 |
| | 256543518001 | 油缸(M)Φ110xΦ90x900 | Lifting cylinder (M)Φ110xΦ90x900 | 1 | H=3500 |
| | 256543518002 | 油缸(M)Φ110xΦ90x925 | Lifting cylinder (M)Φ110xΦ90x925 | 1 | H=3600 |
| | 256544518007 | 油缸(M)Φ110xΦ90x942 | Lifting cylinder (M)Φ110xΦ90x942 | 1 | H=3700 |
| | 256544518008 | 油缸(M)Φ110xΦ90x1022 | Lifting cylinder (M)Φ110xΦ90x1022 | 1 | H=4000 |
| 1 | ▲ | 骨架防尘圈 | Dust Ring | 1 | |
| 2 | ▲ | 挡圈 | Block Circle | 1 | |
| 3 | ▲ | 缸盖 | Cylinder head | 1 | |
| 4 | ▲ | 轴封 | Shaft seal | 1 | |
| 5 | ▲ | O形圈(外 115x3.1) | O-ring （115x3.1） | 1 | |
| 6 | ▲ | 钢背轴承 | Steel back bearing | 1 | |

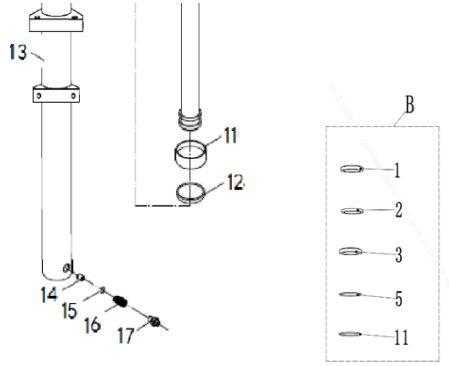


| | | | | | |
|---|---|---|---|---|---|
| 7 | ▲ | 挡圈 | Retaining ring | 1 | |
| 8 | ▲ | O形圈(外 110x3.1) | O-ring （110x3.1） | 1 | |
| 9 | ▲ | 内六角平圆头螺钉(M8x8 发黑) | Hexagon flat head screws | 1 | |
| 10 | ▲ | 活塞杆 | Piston rod | 1 | |
| 11 | ▲ | 组合密封垫 6 | Combined gasket 6 | 1 | |
| 12 | ▲ | 活塞总成 | Piston assembly | 1 | |
| 13 | ▲ | 缸体总成 | Block assembly | 1 | |
| 14 | ▲ | G形卡簧 | G-shaped clamp spring | 1 | |
| 15 | ▲ | 孔用格来圈 | The holes are latticed | 1 | |
| 16 | ▲ | 孔用支承环 | Support rings for holes | 1 | |
| 17 | ▲ | 阀芯 | Spool | 1 | |
| B | 256598510002 | 密封件修理包(中间缸) | Seal kits | **1** | 包括1/2/3/5/11 |
| | | | | | |
| | | | | | |
| | | | | | |
| | | | | | |
| | | | | | |



**256698501041起升油缸 (二级全自由) /Lifting cylinder (Secondary full freedom)**

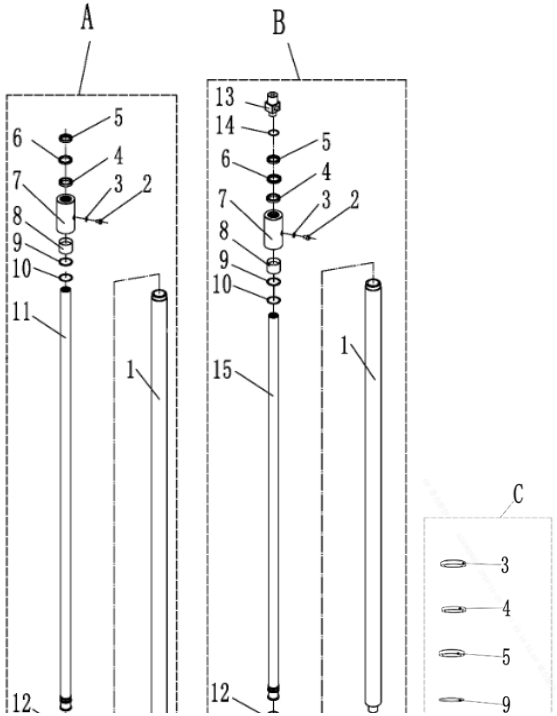


| 序号/NO | 编号 | 名称 | Name | 数量/QTY | 备注/Remark |
|---|---|---|---|---|---|
| A | 256543502701 | 油缸(R)Φ70xΦ50x1200 | Lifting cylinder(R)Φ70xΦ50x1200 | 1 | H=2500 |
| | 256543502702 | 油缸(R)Φ70xΦ50x1300 | Lifting cylinder(R)Φ70xΦ50x1300 | 1 | H=2700 |
| | 256543502703 | 油缸(R)Φ70xΦ50x1450 | Lifting cylinder(R)Φ70xΦ50x1450 | 1 | H=3000 |
| | 256543502704 | 油缸(R)Φ70xΦ50x1600 | Lifting cylinder(R)Φ70xΦ50x1600 | 1 | H=3300 |
| | 256543502705 | 油缸(R)Φ70xΦ50x1700 | Lifting cylinder(R)Φ70xΦ50x1700 | 1 | H=3500 |
| | 256543502706 | 油缸(R)Φ70xΦ50x1750 | Lifting cylinder(R)Φ70xΦ50x1750 | 1 | H=3600 |
| | 256543502707 | 油缸(R)Φ70xΦ50x1800 | Lifting cylinder(R)Φ70xΦ50x1800 | 1 | H=3700 |
| | 256543502708 | 油缸(R)Φ70xΦ50x1950 | Lifting cylinder(R)Φ70xΦ50x1950 | 1 | H=4000 |
| B | 256543502601 | 油缸(L)Φ70xΦ50x1200 | Lifting cylinder(L)Φ70xΦ50x1200 | 1 | H=2500 |
| | 256543502602 | 油缸(L)Φ70xΦ50x1300 | Lifting cylinder(L)Φ70xΦ50x1300 | 1 | H=2700 |
| | 256543502603 | 油缸(L)Φ70xΦ50x1450 | Lifting cylinder(L)Φ70xΦ50x1450 | 1 | H=3000 |
| | 256543502604 | 油缸(L)Φ70xΦ50x1600 | Lifting cylinder(L)Φ70xΦ50x1600 | 1 | H=3300 |
| | 256543502605 | 油缸(L)Φ70xΦ50x1700 | Lifting cylinder(L)Φ70xΦ50x1700 | 1 | H=3500 |
| | 256543502606 | 油缸(L)Φ70xΦ50x1750 | Lifting cylinder(L)Φ70xΦ50x1750 | 1 | H=3600 |
| | 256543502607 | 油缸(L)Φ70xΦ50x1800 | Lifting cylinder(L)Φ70xΦ50x1800 | 1 | H=3700 |
| | 256543502608 | 油缸(L)Φ70xΦ50x1950 | Lifting cylinder(L)Φ70xΦ50x1950 | 1 | H=4000 |
| 1 | ▲ | 缸体 | Cylinder block | 2 | |
| 2 | ▲ | 内六角圆柱头螺钉 | Hexagon socket head screws | 2 | |
| 3 | ▲ | 组合密封垫圈 | Combined sealing gasket | 2 | |
| 4 | ▲ | 轴封 | Shaft seal | 2 | |
| 5 | ▲ | 防尘圈 | Dust Ring | 2 | |
| 6 | ▲ | 挡圈 | Circlip | 2 | |
| 7 | ▲ | 缸盖 | Cylinder head | 2 | |
| 8 | ▲ | 钢背轴承 | Steel back bearing | 2 | |
| 9 | ▲ | O形橡胶密封圈 | O seal ring | 2 | |
| 10 | ▲ | 挡圈 | Circlip | 2 | |
| 11 | ▲ | 右活塞杆 | Piston rod （right) | 1 | |
| 12 | ▲ | 孔用支承环 | Buffer ring | 2 | |
| 13 | ▲ | 左缸接头 | Left cylinder connector | 1 | |

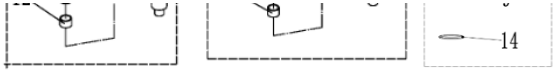


| | | | | | |
|---|---|---|---|---|---|
| 14 | ▲ | O形橡胶密封圈 | O seal ring | 1 | |
| 15 | ▲ | 左活塞杆 | Piston rod (left) | 1 | |
| 16 | ▲ | 钢体 | Steel | 1 | |
| C | 256598510003 | 密封件修理包(起升缸) | Seal kits | 2 | 包含3. 4. 5. 9. 14 |



**256698501042侧移器及管路安装（二级全自由门架）/Side shifter and pipeline installation (Two-stage full-free gantry)**

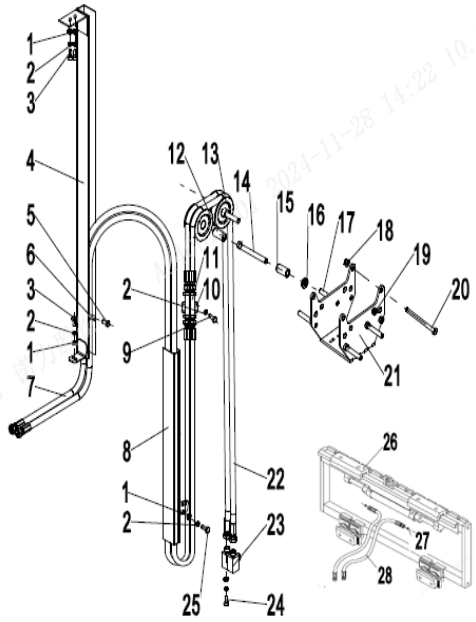


| 序号/NO | 编码/SN | 名称 | Name | 数量/QTY | 备注/Remark |
|---|---|---|---|---|---|
| 1 | 910100300020 | Bolt GB5783-M8x16-8.8 | 螺栓GB5783-M8x16-8.8 | 6 | |
| 2 | 910400500006 | Spring washers GB93-8 | 弹簧垫圈GB93-8 | 13 | |
| 3 | 910400100006 | Flat washers GB97.1-8-200HV | 平垫圈GB97.1-8-200HV | 10 | |
| 4 | 256528510801 | Outer guide groove welding L=986 | 外导槽焊合L=986 | 1 | H=2500 |
| | 256528510802 | Outer guide groove L=1086 | 外导槽焊合L=1086 | 1 | H=2700 |
| | 256528510803 | Outside guide groove L=1236 | 外导槽焊合L=1236 | 1 | H=3000 |
| | 256528510804 | Outside groove L=1386 | 外导槽焊合L=1386 | 1 | H=3300 |
| | 256528510805 | Outside groove L=1486 | 外导槽焊合L=1486 | 1 | H=3500 |
| | 256528510806 | Outside groove L=1536 | 外导槽焊合L=1536 | 1 | H=3600 |
| | 256528510807 | Outside groove L=1586 | 外导槽焊合L=1586 | 1 | H=3700 |
| | 256528510808 | Outside groove L=1786 | 外导槽焊合L=1786 | 1 | H=4000 |
| 5 | 910100300014 | Bolt GB5783-M6x35-8.8 | 螺栓GB5783-M6x35-8.8 | 2 | |
| 6 | 255028520052 | Pressure plate | 压板 | 2 | |
| 7 | 256628529601 | 液压管总成(直)10-L2410-1SC-24° | Hydraulic pipe assembly (straight) 10-L2410-1SC-24° | 2 | H=2500 |
| | 256628529602 | 液压管总成(直)10-L2510-1SC-24° | Hydraulic tube assembly (straight) 10-L2510-1SC-24° | 2 | H=2700 |
| | 256628529603 | 液压管总成(直)10-L2900-1SC-24° | Hydraulic Tube Assembly (Straight) 10-L2900-1SC-24° | 2 | H=3000 |
| | 256628529604 | 液压管总成(直)10-L3290-1SC-24° | Hydraulic Hose Assembly (Straight) 10-L3290-1SC-24° | 2 | H=3300 |
| | 256628529605 | 液压管总成(直)10-L3380-1SC-24° | Hydraulic Hose Assembly (Straight) 10-L3380-1SC-24° | 2 | H=3500 |
| | 256628529606 | 液压管总成(直)10-L3600-1SC-24° | Hydraulic Hose Assembly (Straight) 10-L3600-1SC-24° | 2 | H=3600 |
| | 256628529607 | 液压管总成(直)10-L3630-1SC-24° | Hydraulic Tube Assembly (Straight) 10-L3630-1SC-24° | 2 | H=3700 |
| | 256528529608 | 液压管总成(直)10-L3900-1SC-24° | Hydraulic Tube Assembly (Straight) 10-L3900-1SC-24° | 2 | H=4000 |
| 8 | 256528510701 | Inner guide groove weld fit L=655 | 内导槽焊合L=720 | 1 | H=2500 |
| | 256528510701 | Inner guide groove weld fit L=705 | 内导槽焊合L=720 | 1 | H=2700 |
| | 256528510702 | Inner groove weld fit L=780 | 内导槽焊合L=830 | 1 | H=3000 |
| | 256528510703 | Inner groove weld L=855 | 内导槽焊合L=920 | 1 | H=3300 |
| | 256528510703 | Inner groove L=905 | 内导槽焊合L=920 | 1 | H=3500 |
| | 256528510704 | Inner groove L=930 | 内导槽焊合L=1000 | 1 | H=3600 |
| | 256528510704 | Inner groove L=955 | 内导槽焊合L=1000 | 1 | H=3700 |
| | 256528510705 | Inner groove L=1030 | 内导槽焊合L=1080 | 1 | H=4000 |
| 9 | 910100300022 | Bolt GB5783-M8x20-8.8 | 螺栓GB5783-M8x20-8.8 | 4 | |
| 10 | 251331010002 | Transition steel pipe assembly (24°) | 过渡钢管总成(24°) | 1 | |



**256698501042侧移器及管路安装（二级全自由门架）/Side shifter and pipeline installation (Two-stage full-free gantry)**

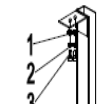


| 序号/NO | 编码/SN | 名称 | Name | 数量/QTY | 备注/Remark |
|---|---|---|---|---|---|
| 11 | 256530510003 | Gasket Plate | 垫板 | 1 | |
| 12 | 255029020023 | BushingsΦ20xΦ13x28 | 衬套Φ20xΦ13x28 | 4 | |
| 13 | 271527521003 | Pulley Φ74x46(double groove) | 滑轮Φ74x46(双槽) | 2 | |
| 14 | 910100100062 | Bolt GB5782-M12x140-8.8 | 螺栓GB5782-M12x140-8.8 | 2 | |
| 15 | 271527521004 | Bushing Φ20xΦ13x41.5 | 衬套Φ20xΦ13x41.5 | 2 | |
| 16 | 256531020005 | Washer | 垫圈 | 4 | |

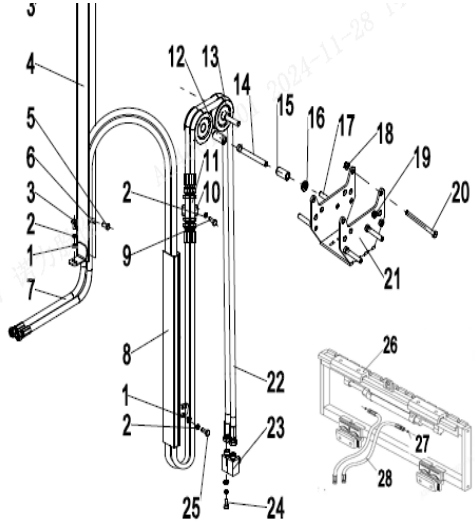

| | | | | | |
|---|---|---|---|---|---|
| 17 | 254130520014 | Pulley gear lever | 滑轮档杆 | 4 | |
| 18 | 910302300003 | Nuts DIN985-M8-8 | 螺母DIN985-M8-8 | 2 | |
| 19 | 910302300005 | Nuts DIN985-M12-8 | 螺母DIN985-M12-8 | 2 | |
| 20 | 910100100160 | Bolt GB5782-M8x130-8.8 | 螺栓GB5782-M8x130-8.8 | 2 | |
| 21 | 257031010002 | Hose holder (base) | 胶管支架（底座） | 1 | |
| 22 | 256628529611 | 液压管总成(直)10-L1340-1SC-24° | Hydraulic hose assembly (straight) 10-L1340-1SC-24° | 2 | H=2500 |
| | 256628529612 | 液压管总成(直)10-L1440-1SC-24° | Hydraulic hose assembly (straight) 10-L1440-1SC-24° | 2 | H=2700 |
| | 256628529613 | 液压管总成(直)10-L1500-1SC-24° | Hydraulic Tube Assembly (Straight) 10-L1500-1SC-24° | 2 | H=3000 |
| | 256628529614 | 液压管总成(直)10-L1560-1SC-24° | Hydraulic Tube Assembly (Straight) 10-L1560-1SC-24° | 2 | H=3300 |
| | 256628529615 | 液压管总成(直)10-L1650-1SC-24° | Hydraulic Hose Assembly (Straight) 10-L1650-1SC-24° | 2 | H=3500 |
| | 256628529616 | 液压管总成(直)10-L1610-1SC-24° | Hydraulic Hose Assembly (Straight) 10-L1610-1SC-24° | 2 | H=3600 |
| | 256628529615 | 液压管总成(直)10-L1650-1SC-24° | Hydraulic Tube Assembly (Straight) 10-L1650-1SC-24° | 2 | H=3700 |
| | 256628529618 | 液压管总成(直)10-L1750-1SC-24° | Hydraulic Tube Assembly (Straight) 10-L1750-1SC-24° | 2 | H=4000 |
| 23 | 251230520010 | Fittings(Locking Bend)8-2xM16x1.5-24° | 接头(锁定弯)8-2xM16x1.5-24° | 2 | |
| 24 | 910100100024 | Bolt GB5782-M8x50-8.8 | 螺栓GB5782-M8x50-8.8 | 4 | |
| 25 | 910200200059 | Screw GB70.1-M8x30-8.8 | 螺钉GB70.1-M8x30-8.8 | 2 | |
| 26 | 272042510001 | Side shifter assembly (linkage) | 侧移器总成(联动) | 1 | |
| 27 | 910800100042 | O-ring-outer 13.6x2.4 | O形圈-外13.6x2.4 | 2 | |
| 28 | 256539529601 | Hydraulic hose assembly (90°) 10-L400-1SC-24°-0° | 液压管总成(90°)10-L400-1SC-24°-0° | 2 | |



**256698501043门架（三级全自由门架）/Gantry (Three-level full-free gantry)**

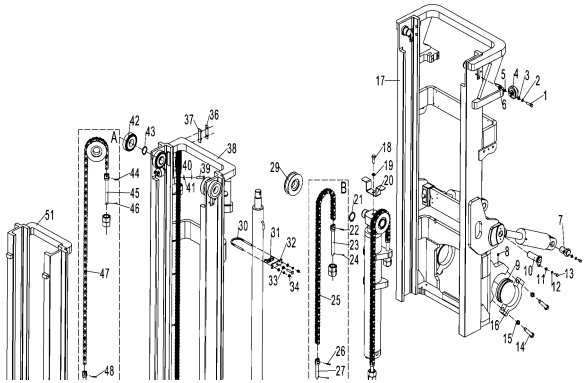

| 序号/NO | 编码/SN | 名称 | Name | 数量/QTY | 备注/Remark |
|---|---|---|---|---|---|
| 1 | 910100300052 | 螺栓GB5783-M12x40-8.8 | Bolt GB5783-M12x40-8.8 | 18 | |
| 2 | 910400500008 | 弹簧垫圈GB93-12 | Spring washer GB93-12 | 18 | |
| 3 | 910400100008 | 平垫圈GB97.1-12-200HV | Plain washers GB97.1-12-200HV | 18 | |
| 4 | 256844520001 | 侧滚轮Φ87-CD=55（偏心） | Side roller Φ87-CD=55 (eccentric) | 2 | |
| 5 | 256544020701 | 垫圈Φ20xΦ13x0.5 | Washer Φ20xΦ13x0.5 | 46 | |
| | 256544020702 | 垫圈Φ20xΦ13x1 | Washer Φ20xΦ13x1 | 46 | |
| 6 | 910100300052 | 螺栓GB5783-M12x40-8.8 | Bolt GB5783-M12x40-8.8 | 18 | |
| 7 | 256544010002 | 带耳轴Φ40x70 | Axle Φ40x70 | 2 | |
| 8 | 911200100004 | 油杯JB7940.1-M10x1 | Oil Cup JB7940.1-M10X1 | 2 | |
| 9 | 256544020009 | 轴瓦 | Bush | 2 | |
| 10 | 256544010001 | 带耳轴Φ40x112 | Axle Φ40x112 | 2 | |
| 11 | 910400500007 | 弹簧垫圈GB93-10 | Spring washer GB93-10 | 12 | |
| 12 | 910400100007 | 平垫圈GB97.1-10-200HV | Plain washers GB97.1-10-200HV | 12 | |
| 13 | 910100300035 | 螺栓GB5783-M10x20-8.8 | Bolt GB5783-M10x20-8.8 | 4 | |
| 14 | 910100200021 | 螺栓GB5785-M20x1.5x100-8.8 | Bolt GB5785-M20x1.5x100-8.8 | 4 | |
| 15 | 910400500012 | 弹簧垫圈GB93-20 | Spring washer GB93-20 | 4 | |
| 16 | 256544020007 | 哈弗盖 | Haverguy | 2 | |
| 17 | 256544511001 | 外门架焊合(3700) | Outer mast(3700) | 1 | H=3700 |
| | 256544511002 | 外门架焊合(4000) | Outer mast(4000) | 1 | H=4000 |
| | 256544511003 | 外门架焊合(4350) | Outer mast(4350) | 1 | H=4350 |
| | 256544511004 | 外门架焊合(4500) | Outer mast(4500) | 1 | H=4500 |

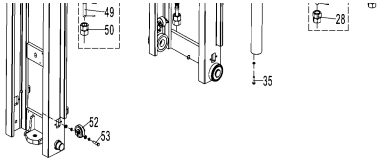

| | | | | | |
|---|---|---|---|---|---|
| 17 | 256544511005 | 外门架焊合(4800) | Outer mast(4800) | 1 | H=4800 |
| | 256544511006 | 外门架焊合(5000) | Outer mast(5000) | 1 | H=5000 |
| | 256544511007 | 外门架焊合(5500) | Outer mast(5500) | 1 | H=5500 |
| | 256544511008 | 外门架焊合(6000) | Outer mast(6000) | 1 | H=6000 |
| 18 | 910100300071 | 螺栓GB5783-M16x45-8.8 | Bolt GB5783-M16x45-8.8 | 1 | |
| 19 | 910400500010 | 弹簧垫圈GB93-16 | Spring washer GB93-16 | 1 | |
| 20 | 256544520001 | 挡板(链条) | Baffle (chain) | 1 | |
| 21 | 910401300026 | 轴用弹性挡圈GB894.1-55 | Shaft with elastic retaining ring GB894.1-55 | 4 | |
| 22 | 256544020706 | 销轴Φ9.5x38 | Pin Φ9.5x38 | 2 | |
| 23 | 256544020707 | 链条螺栓M22x1.5x214 | Chain bolts M22x1.5x214 | 1 | |



**256698501043门架（三级全自由门架）/Gantry (Three-level full-free gantry)**

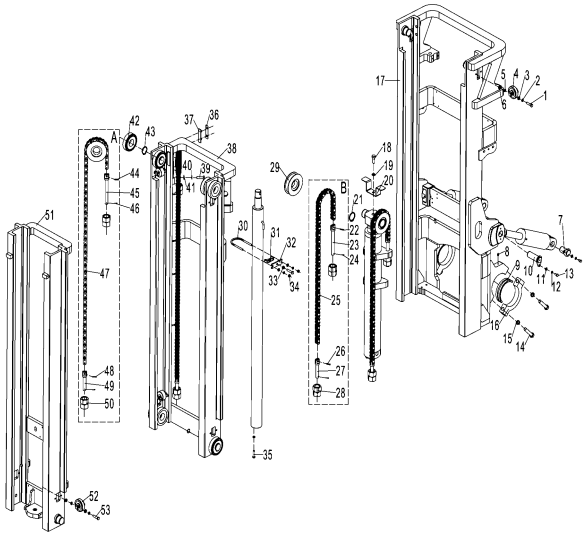

| 序号/NO | 编码/SN | 名称 | Name | 数量/QTY | 备注/Remark |
|---|---|---|---|---|---|
| 24 | 910600600023 | 开口销GB91-3x40 | Pin GB91-3x40 | 2 | |
| 25 | ▲ | 板式链GB6074-LH1634 | Plate chain GB6074-LH1634 | 1 | |
| 26 | 910600600026 | 开口销GB91-3.2x20 | Pin GB91-3.2x20 | 2 | |
| 27 | 256544020705 | 链条螺栓M22x1.5x149 | Chain bolts M22x1.5x149 | 1 | |
| 28 | 910300200007 | 螺母GB6171-M22x1.5-10 | Nuts GB6171-M22X1.5-10 | 4 | |
| 29 | 940200500006 | 链轮轴承782311-Φ135xΦ55X34 | Sprocket bearings 782311-Φ135xΦ55X34 | 4 | |
| 30 | 256544020008 | U形螺栓Φ88 | U-bolt Φ88 | 2 | |
| 31 | 256544020004 | 橡胶套 | Rubber sleeve | 2 | |
| 32 | 256544020005 | 固定座(油缸环座) | Fixed seat (cylinder ring seat) | 2 | |
| 33 | 910300100008 | 螺母GB6170-M12-10 | Nuts GB6170-M12-10 | 2 | |
| 34 | 910300100007 | 螺母GB6170-M10-10 | Nuts GB6170-M10-10 | 2 | |
| 35 | 910100400013 | 螺栓GB5786-M12x1.25x45-8.8 | Bolt GB5786-M12x1.25x45-8.8 | 2 | |
| 36 | 255044020131 | 垫板 | Base plate | 4 | |
| 37 | 255044020132 | 调整垫片0.8 | Adjusting pad t=0.8 | 4 | |
| | 255044020133 | 调整垫片0.5 | Adjusting pad t=0.5 | 4 | |
| | 255044020134 | 调整垫片0.2 | Adjusting pad t=0.2 | 4 | |
| 38 | 256544513001 | 中门架焊合(3700) | Middle mast(3700) | 1 | H=3700 |
| | 256544513002 | 中门架焊合(4000) | Middle mast(4000) | 1 | H=4000 |
| | 256544513003 | 中门架焊合(4350) | Middle mast(4350) | 1 | H=4350 |
| | 256544513004 | 中门架焊合(4500) | Middle mast(4500) | 1 | H=4500 |
| | 256544513005 | 中门架焊合(4800) | Middle mast(4800) | 1 | H=4800 |
| | 256544513006 | 中门架焊合(5000) | Middle mast(5000) | 1 | H=5000 |
| | 256544513007 | 中门架焊合(5500) | Middle mast(5500) | 1 | H=5500 |
| | 256544513008 | 中门架焊合(6000) | Middle mast(6000) | 1 | H=6000 |
| 39 | 910100300065 | 螺栓GB5783-M14x50-8.8 | Bolt GB5783-M14x50-8.8 | 2 | |
| 40 | 910400100009 | 平垫圈GB97.1-14-200HV | Plain washers GB97.1-14-200HV | 2 | |
| 41 | 910400500009 | 弹簧垫圈GB93-14 | Spring washer GB93-14 | 2 | |
| 42 | 940200100004 | 主滚轮Φ123xΦ50x34 | The main wheel Φ123X Φ50X34 | 8 | |
| 43 | 910401300024 | 轴用弹性挡圈GB894.1-50 | Elastic retaining ring GB894.1-50 for shaft | 8 | |
| 44 | 256544020706 | 销轴Φ9.5x38 | Pin Φ9.5x38 | 2 | |
| 45 | 256544020707 | 链条螺栓M22x1.5x214 | Chain bolts M22x1.5x214 | 1 | |



**256698501043门架（三级全自由门架）/Gantry (Three-level full-free gantry)**

| 序号/NO | 编码/SN | 名称 | Name | 数量/QTY | 备注/Remark |
|---|---|---|---|---|---|

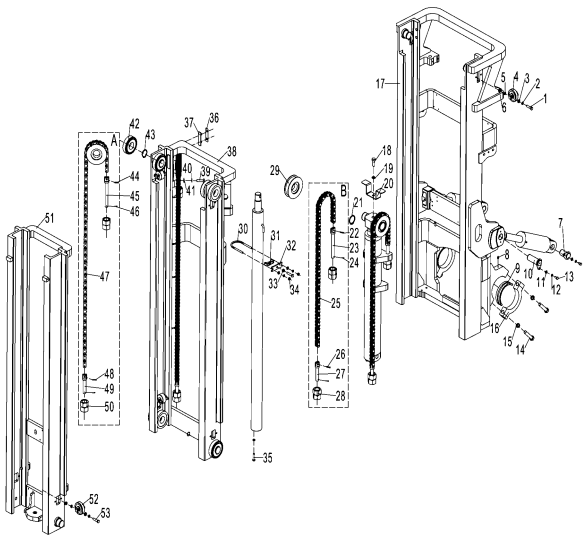

| | | | | | |
|---|---|---|---|---|---|
| 46 | 910600600023 | 开口销GB91-3x40 | Pin GB91-3x40 | 2 | |
| 47 | ▲ | 板式链GB6074-LH1634 | Plate chain GB6074-LH1634 | 1 | H=3700 |
| 48 | 910600600026 | 开口销GB91-3.2x20 | Pin GB91-3.2x20 | 2 | H=4000 |
| 49 | 256544020705 | 链条螺栓M22x1.5x149 | Chain bolts M22x1.5x149 | 1 | H=4350 |
| 50 | 910300200007 | 螺母GB6171-M22x1.5-10 | Nuts GB6171-M22X1.5-10 | 4 | H=4500 |
| 51 | 256544512001 | 内门架焊合(3700) | Inner mast 3700 | 1 | H=3700 |
| | 256544512002 | 内门架焊合(4000) | Inner mast (4000) | 1 | H=4000 |
| | 256544512003 | 内门架焊合(4350) | Inner mast (4350) | 1 | H=4350 |
| | 256544512004 | 内门架焊合(4500) | Inner mast (4500) | 1 | H=4500 |
| | 256544512005 | 内门架焊合(4800) | Inner mast (4800) | 1 | H=4800 |
| | 256544512006 | 内门架焊合(5000) | Inner mast (5000) | 1 | H=5000 |
| | 256544512007 | 内门架焊合(5500) | Inner mast (5500) | 1 | H=5500 |
| | 256544512008 | 内门架焊合(6000) | Inner mast (6000) | 1 | H=6000 |
| 52 | 910100100048 | 螺栓GB5782-M12x50-8.8 | Bolt GB5782-M12x50-8.8 | 12 | |
| 53 | 940200200001 | 侧滚轮Φ67-CD=65 | Side roller Φ67-CD=65 | 6 | |
| A | 256544014001 | 起升链条LH1634-67 | Lifting chain LH1634-53 | 2 | H=3700 |
| | 256544514006 | 起升链条LH1634-71 | Lifting chain LH1634-71 | 2 | H=4000 |
| | 256544514002 | 起升链条LH1634-75 | Lifting chain LH1634-75 | 2 | H=4350 |
| | 256544514003 | 起升链条LH1634-77 | Lifting chain LH1634-77 | 2 | H=4500 |
| | 256544514004 | 起升链条LH1634-81 | Lifting chain LH1634-81 | 2 | H=4800 |
| | 256544514005 | 起升链条LH1634-83 | Lifting chain LH1634-83 | 2 | H=5000 |
| | 256544014005 | 起升链条LH1634-89 | Lifting chain LH1634-89 | 2 | H=5500 |
| | 256544014008 | 起升链条LH1634-101 | Lifting chain LH1634-101 | 2 | H=6000 |
| B | 256544515001 | 起升链条LH1634-51 | Lifting chain LH1634-51 | 2 | H=3700 |
| | 256544515002 | 起升链条LH1634-55 | Lifting chain LH1634-55 | 2 | H=4000/4350 |
| | 256544515003 | 起升链条LH1634-57 | Lifting chain LH1634-57 | 2 | H=4500 |
| | 256544515004 | 起升链条LH1634-59 | Lifting chain LH1634-59 | 2 | H=4800 |
| | 256544515005 | 起升链条LH1634-61 | Lifting chain LH1634-61 | 2 | H=5000 |
| | 256544515006 | 起升链条LH1634-67 | Lifting chain LH1634-67 | 2 | H=5500 |
| | 256544515007 | 起升链条LH1634-69 | Lifting chain LH1634-69 | 2 | H=6000 |



**256698501044货叉架（三级全自由门架）/Fork rack (Three-level full-free gantry)**

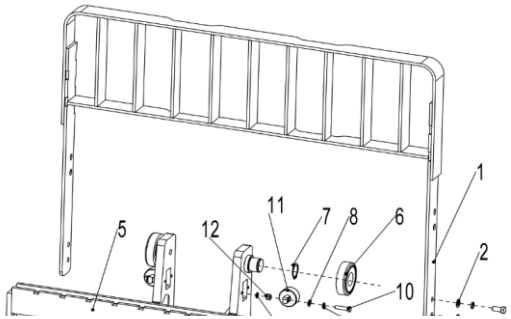

| 序号/NO | 编码/SN | 名称 | Name | 数量/QTY | 备注/Remark |
|---|---|---|---|---|---|
| 1 | 256540511001 | 挡货架焊合(1380x1130) | Welding of retaining rack (1380x1130) | 1 | |
| 2 | 910400100008 | 平垫圈GB97.1-12-200HV | Plain washer GB97.1-12-200HV | 4 | |
| 3 | 910400500008 | 弹簧垫圈GB93-12 | Spring washer GB93-12 | 4 | |
| 4 | 910100300050 | 螺栓GB5783-M12x30-8.8 | Bolt GB5783-M12x30-8.8 | 4 | |
| 5 | 256538013001 | 货叉架体焊合(三级全自由) | Welding of fork frame body (three-level full freedom) | 1 | |
| 6 | 940200100036 | 主滚轮Φ123.5xΦ50x34 | Main rollerΦ123.5xΦ50x34 | 4 | |
| | 940200100037 | 主滚轮Φ124xΦ50x34 | Main roller Φ124xΦ50x34 | 4 | |
| 7 | 910401300024 | 轴用弹性挡圈GB894.1-50 | Circlip for shaft GB894.1-50 | 4 | |
| 8 | 910400500008 | 弹簧垫圈GB93-12 | Spring washer GB93-12 | 8 | |
| 9 | 910400100008 | 平垫圈GB97.1-12-200HV | Plain washer GB97.1-12-200HV | 8 | |
| 10 | 910100300054 | 螺栓GB5783-M12x50-8.8 | Bolt GB5783-M12x50-8.8 | 8 | |
| 11 | 940200200001 | 侧滚轮Φ67-CD=65 | Side roller Φ 67-CD=65 | 2 | |
| 12 | 256544020701 | 垫圈Φ20xΦ13x0.5 | Washer Φ 20x Φ 13x0.5 | 16 | |
| | 256544020702 | 垫圈Φ20xΦ13x1 | Washer Φ 20x Φ 13x1 | 16 | |
| 13 | 256544020003 | 垫圈Φ20xΦ13x7 | Washer Φ 20x Φ 13x7 | 16 | |

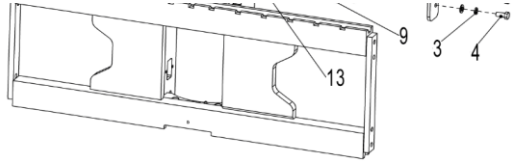




**256698501045起升管路（三级全自由门架）/Lifting pipeline (Three-stage full-free gantry)**

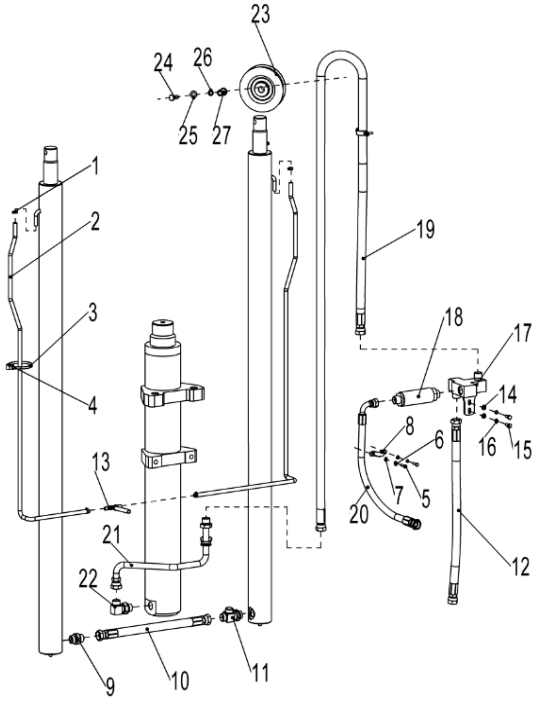


| 序号/NO | 编码/SN | 名称 | Name | 数量/QTY | 备注/Remark |
|---|---|---|---|---|---|
| 1 | 255044020043 | 卡箍13 | Clamp 13 | 4 | |
| 2 | 900200301004 | 软管13x1.5/PE | Hose 13x1.5/PE | 1 | |
| 3 | 921600400001 | 扎带4x250 | Ties 4x250 | 4 | |
| 4 | 255044020042 | 压板 | Platen | 4 | |
| 5 | 910100300012 | 螺栓GB5783-M6x25-8.8 | Bolt GB5783-M6x25-8.8 | 4 | |
| 6 | 910400500005 | 弹簧垫圈GB93-6 | Spring washer GB93-6 | 4 | |
| 7 | 910400100005 | 平垫圈GB97.1-6-200HV | Plain washer GB97.1-6-200HV | 4 | |
| 8 | 951000100003 | 管夹YGE包胶15 | Pipe clamp YGE rubber coating 15 | 2 | |
| 9 | 257044529001 | 接头16-2xM27x1.5-24° | Fitting 16-2xM27x1.5-24° | 1 | |
| 10 | 256644529611 | 液压管总成(直)18-L450-2SC-24° | Hydraulic hose assembly (straight) 18-L450-2SC-24° | 1 | |
| 11 | 256544529007 | 接头三通 | Fitting tee | 1 | |
| 12 | 256644529612 | 液压管总成(直)18-L670-2SC-24° | Hydraulic hose assembly (straight) 18-L670-2SC-24° | 1 | |
| 13 | 255044020118 | 接头(三通) | Connector (tee) | 1 | |
| 14 | 910400100006 | 平垫圈GB97.1-8-200HV | Plain washer GB97.1-8-200HV | 2 | |
| 15 | 910100300023 | 螺栓GB5783-M8x25-8.8 | Bolt GB5783-M8x25-8.8 | 2 | |
| 16 | 910400500006 | 弹簧垫圈GB93-8 | Spring washer GB93-8 | 2 | |
| 17 | 256544519004 | 三通阀总成 | Three-way valve assembly | 1 | |
| 18 | 256544019002 | 限速阀 | Speed Limiting Valve | 1 | |
| 19 | 256644529601 | 液压管总成(直)18-L2360-2SC-24° | Hydraulic Hose Assembly (Straight) 18-L2360-2SC-24° | 1 | H=3700 |
| | 256644529602 | 液压管总成(直)18-L2560-2SC-24° | Hydraulic Tube Assembly (Straight) 18-L2560-2SC-24° | 1 | H=4000 |
| | 256644529603 | 液压管总成(直)18-L2800-2SC-24° | Hydraulic Hose Assembly (Straight) 18-L2800-2SC-24° | 1 | H=4350 |
| | 256644529604 | 液压管总成(直)18-L2890-2SC-24° | Hydraulic Tube Assembly (Straight) 18-L2890-2SC-24° | 1 | H=4500 |
| | 256644529605 | 液压管总成(直)18-L3100-2SC-24° | Hydraulic Hose Assembly (Straight) 18-L3100-2SC-24° | 1 | H=4800 |
| | 256644529606 | 液压管总成(直)18-L3220-2SC-24° | Hydraulic Hose Assembly (Straight) 18-L3220-2SC-24° | 1 | H=5000 |
| | 256644529607 | 液压管总成(直)18-L3550-2SC-24° | Hydraulic Hose Assembly (Straight) 18-L3550-2SC-24° | 1 | H=5500 |
| | 256644529608 | 液压管总成(直)18-L4100-2SC-24° | Hydraulic Hose Assembly (Straight) 18-L4100-2SC-24° | 1 | H=6000 |
| | 256644529609 | 液压管总成(直)18-L4580-2SC-24° | Hydraulic Hose Assembly (Straight) 18-L4580-2SC-24° | 1 | H=6500 |
| | 256644529610 | 液压管总成(直)18-L5080-2SC-24° | Hydraulic Hose Assembly (straight) 18-L5080-2SC-24° | 1 | H=7000 |
| 20 | 256644029600 | 液压管总成(45°)18-L800-2SC-24°带钢丝防护 | Hydraulic hose assembly (45°) 18-L800-2SC-24° with wire pro | 1 | |
| 21 | 256544519005 | 中缸过渡钢管焊合 | Middle Cylinder Transition Pipe Welding | 1 | |
| 22 | 257044529007 | 接头(锁定弯)16-M27x2-M27x1.5-24° | Fitting (locking bend) 16-M27x2-M27x1.5-24° | 1 | |

| | | | | | | |
|---|---|---|---|---|---|---|
| | 23 | 256544529004 | 滑轮Φ145x38(单槽) | pulley Φ 145x38 (single slot) | 1 | |
| | 24 | 910100300054 | 螺栓GB5783-M12x50-8.8 | Bolt GB5783-M12x50-8.8 | 1 | |
| | 25 | 910400100008 | 平垫圈GB97.1-12-200HV | Plain washer GB97.1-12-200HV | 1 | |
| | 26 | 910400500008 | 弹簧垫圈GB93-12 | Spring washer GB93-12 | 1 | |
| | 27 | 254130520016 | 衬套Φ20xΦ13x43 | bushing Φ 20x Φ 13x43 | 1 | |



**256698501046短升降油缸 (三级全自由) /Short Lifting cylinder (Three-stage full freedom)**

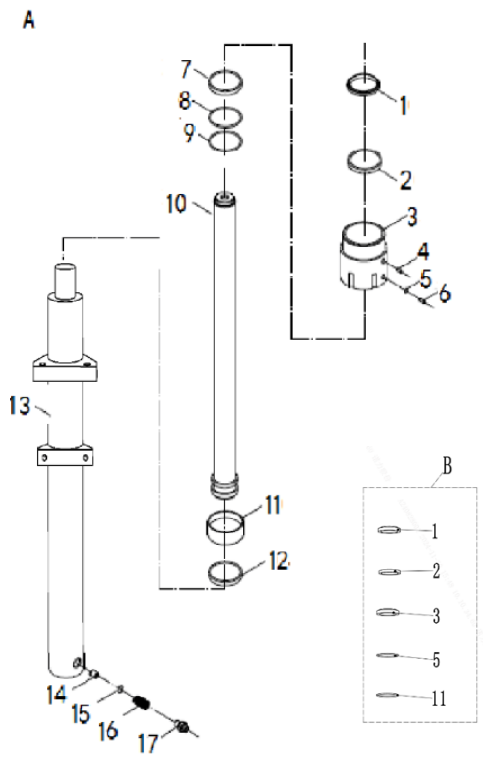


| 序号 /NO | 编码/SN | 名称 | Name | 数量/QTY | 备注/Remark |
|---|---|---|---|---|---|
| A | 256544518001 | 油缸Φ110xΦ90x637 | Lifting cylinderΦ110xΦ90x637 | 2 | H=3700 |
| | 256544518002 | 油缸Φ110xΦ90x687 | Lifting cylinderΦ110xΦ90x687 | 2 | H=4000 |
| | 256544518003 | 油缸Φ110xΦ90x747 | Lifting cylinderΦ110xΦ90x747 | 2 | H=4350 |
| | 256544518004 | 油缸Φ110xΦ90x772 | Lifting cylinderΦ110xΦ90x772 | 2 | H=4500 |
| | 256544518005 | 油缸Φ110xΦ90x822 | Lifting cylinderΦ110xΦ90x822 | 2 | H=4800 |
| | 256544518006 | 油缸Φ110xΦ90x857 | Lifting cylinderΦ110xΦ90x857 | 2 | H=5000 |
| | 256544518007 | 油缸Φ110xΦ90x942 | Lifting cylinderΦ110xΦ90x942 | 2 | H=5500 |
| | 256544518008 | 油缸Φ110xΦ90x1022 | Lifting cylinderΦ110xΦ90x1022 | 2 | H=6000 |
| 1 | ▲ | 骨架防尘圈 DKB 50×62×7/10 | Dust Ring | 1 | |
| 2 | ▲ | 轴封 D2 50×60×6 | Shaft seal D2 50×60×6 | 1 | |
| 3 | ▲ | 导向套 | Guide sleeve | 1 | |
| 4 | ▲ | 缸盖 | Cylinder head | 1 | |
| 5 | ▲ | O形橡胶密封圈 80×3.55 | O-ring 80×3.55 | 1 | |
| 6 | ▲ | 钢背轴承 SF-1/Ø55×Ø50×27 | Steel back bearing SF-1/Ø55×Ø50×27 | 1 | |
| 7 | ▲ | 开槽平端紧定螺钉 M8×8 | Slotted set screws with flat end M8×8 | 1 | |
| 8 | ▲ | 尼龙垫 Ø6×3 | Nylon Mat Ø6×3 | 1 | |
| 9 | ▲ | 活塞杆 | Piston rod | 1 | |
| 10 | ▲ | O形橡胶密封圈（内 50X2） | O-ring （50X2） | 1 | |
| 11 | ▲ | 调整套 | Adjustment set | 2 | |
| 12 | ▲ | 轴用钢丝挡圈 Ø34×Ø2 | Steel wire collar for shaft Ø34×Ø2 | 1 | |
| 13 | ▲ | 活塞 | Piston | 1 | |
| 14 | ▲ | 孔用支承环 D 70×25×2.5 | Support rings for holes D 70×25×2.5 | 1 | |
| 15 | ▲ | 缓冲套 | Buffer Sleeve | 1 | |
| 16 | ▲ | 孔封 OSI70×60×6 | Hole seal OSI70×60×6 | 1 | |
| 17 | ▲ | 挡圈 Ø60×Ø70×3 | Retaining ring Ø60×Ø70×3 | 1 | |
| 18 | ▲ | 缸体总成 | Block assembly | 1 | |
| 19 | ▲ | 钢丝挡圈Ø27×Ø2.5 | Steel wire retaining ring Ø27×Ø2.5 | 1 | |
| 20 | ▲ | 弹簧Ø17.3×Ø2.3×48.5 | Spring Ø17.3×Ø2.3×48.5 | 1 | |
| 21 | ▲ | 圆柱销 10×25 | Pin 10×25 | 1 | |
| 22 | ▲ | 阀芯Ø23×31六孔Ø 5.2 | The valve core ø23 × 31 six-hole ø5.2 | 1 | |
| B | 256598510004 | 密封件修理包(中间缸) | Seal kits | 1 | 包括1/2/3/5/11 |



**256698501047起升油缸（三级全自由）/Lifting cylinder (Three stage full freedom)**

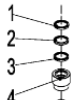


| 序号 /NO | 编码/SN | 名称 | Name | 数量/QTY | 备注/Remark |
|---|---|---|---|---|---|
| A | 256544516001 | 油缸Φ70xΦ50x1208 | Lifting cylinderΦ70xΦ50x1208 | 2 | H=3700 |
| | 256544516002 | 油缸Φ70xΦ50x1308 | Lifting cylinderΦ70xΦ50x1308 | 2 | H=4000 |
| | 256544516003 | 油缸Φ70xΦ50x1423 | Lifting cylinderΦ70xΦ50x1423 | 2 | H=4350 |
| | 256544516004 | 油缸Φ70xΦ50x1473 | Lifting cylinderΦ70xΦ50x1473 | 2 | H=4500 |

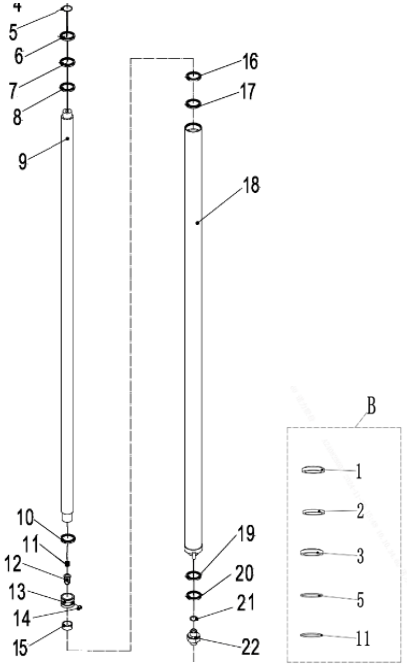


| | | | | | |
|---|---|---|---|---|---|
| A | 256544516005 | 油缸Φ70xΦ50x1573 | Lifting cylinderΦ70xΦ50x1573 | 2 | H=4800 |
| | 256544516006 | 油缸Φ70xΦ50x1638 | Lifting cylinderΦ70xΦ50x1638 | 2 | H=5000 |
| | 256544516007 | 油缸Φ70xΦ50x1803 | Lifting cylinderΦ70xΦ50x1803 | 2 | H=5500 |
| | 256544516008 | 油缸Φ70xΦ50x1973 | Lifting cylinderΦ70xΦ50x1973 | 2 | H=6000 |
| 1 | ▲ | 骨架防尘圈 DKB 50×62×7/10 | Dust Ring | 1 | |
| 2 | ▲ | 轴封 D2 50×60×6 | Shaft seal D2 50×60×6 | 1 | |
| 3 | ▲ | 导向套 | Guide sleeve | 1 | |
| 4 | ▲ | 缸盖 | Cylinder head | 1 | |
| 5 | ▲ | O形橡胶密封圈 80×3.55 | O seal ring 80×3.55 | 1 | |
| 6 | ▲ | 钢背轴承 SF-1/Ø55×Ø50×27 | Steel back bearing SF-1/Ø55×Ø50×27 | 1 | |
| 7 | ▲ | 开槽平端紧定螺钉 M8×8 | Slotted set screws with flat end M8×8 | 1 | |
| 8 | ▲ | 尼龙垫 Ø6×3 | Nylon Mat Ø6×3 | 1 | |
| 9 | ▲ | 活塞杆 | Piston rod | 1 | |
| 10 | ▲ | O形橡胶密封圈（内 50X2） | O-ring （50X2） | 1 | |
| 11 | ▲ | 调整套 | Adjustment set | 2 | |
| 12 | ▲ | 轴用钢丝挡圈 Ø34×Ø2 | Steel wire collar for shaft Ø34×Ø2 | 1 | |
| 13 | ▲ | 活塞 | Piston | 1 | |
| 14 | ▲ | 孔用支承环 D 70×25×2.5 | Support rings for holes D 70×25×2.5 | 1 | |
| 15 | ▲ | 缓冲套 | Buffer Sleeve | 1 | |
| 16 | ▲ | 孔封 OSI70×60×6 | Hole seal OSI70×60×6 | 1 | |
| 17 | ▲ | 挡圈 Ø60×Ø70×3 | Retaining ring Ø60×Ø70×3 | 1 | |
| 18 | ▲ | 缸体总成 | Block assembly | 1 | |
| 19 | ▲ | 钢丝挡圈Ø27×Ø2.5 | Steel wire retaining ring Ø27×Ø2.5 | 1 | |
| 20 | ▲ | 弹簧Ø17.3×Ø2.3×48.5 | Spring Ø17.3×Ø2.3×48.5 | 1 | |
| 21 | ▲ | 圆柱销 10×25 | Pin 10×25 | 1 | |
| 22 | ▲ | 阀芯Ø23×31六孔Ø 5.2 | The valve core ø23 × 31 six-hole ø5.2 | 1 | |
| B | 256598510006 | 密封件修理包(起升缸) | Seal kits | **1** | 包括1/2/3/5/11 |



**256698501048侧移器及管路安装（三级全自由门架）/Side shifter and pipeline installation (three-stage full-free gantry)**

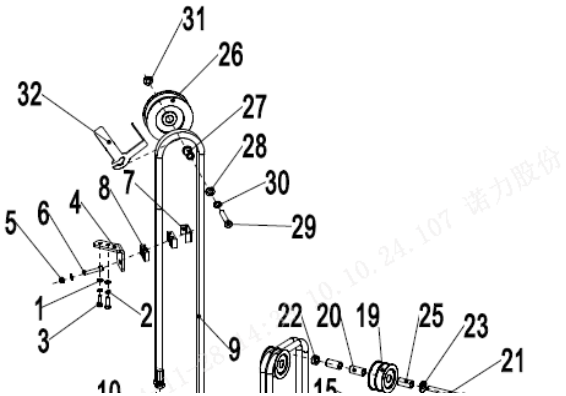


| 序号/NO | 编码/SN | 名称 | Name | 数量/QTY | 备注/Remark |
|---|---|---|---|---|---|
| 1 | 910400500006 | Spring washers GB93-8 | 弹簧垫圈GB93-8 | 10 | |
| 2 | 910400100006 | Flat washers GB97.1-8-200HV | 平垫圈GB97.1-8-200HV | 8 | |
| 3 | 910100300023 | Bolt GB5783-M8x25-8.8 | 螺栓GB5783-M8x25-8.8 | 4 | |
| 4 | 256530520001 | Bracket (triple) | 支架（三联） | 1 | |
| 5 | 910300500004 | Nut GB889.1-M8-10 | 螺母GB889.1-M8-10 | 2 | |
| 6 | 910200200062 | Screw GB70.1-M8x45-8.8 | 螺钉GB70.1-M8x45-8.8 | 4 | |
| 7 | 255028520035 | Mounting plate (hose clamp) | 安装板(管夹) | 2 | |
| 8 | 255028520034 | Hose fixing block | 胶管固定块 | 4 | |
| 9 | 256630529601 | 液压管总成（直）10-L2290-1SC-24° | Hydraulic Hose Assembly (straight) 10-L2290-1SC-24° | 2 | H=3700 |
| | 256630529602 | 液压管总成（直）10-L2490-1SC-24° | Hydraulic Tube Assembly (Straight) 10-L2490-1SC-24° | 2 | H=4000 |
| | 256630529603 | 液压管总成（直）10-L2720-1SC-24° | Hydraulic Hose Assembly (straight) 10-L2720-1SC-24° | 2 | H=4350 |
| | 256630529604 | 液压管总成（直）10-L3020-1SC-24° | Hydraulic Hose Assembly (Straight) 10-L3020-1SC-24° | 2 | H=4500 |
| | 256630529605 | 液压管总成（直）10-L3220-1SC-24° | Hydraulic Hose Assembly (Straight) 10-L3220-1SC-24° | 2 | H=4800 |
| | 256630529606 | 液压管总成（直）10-L3450-1SC-24° | Hydraulic Hose Assembly (straight) 10-L3450-1SC-24° | 2 | H=5000 |
| | 256630529607 | 液压管总成（直）10-L3780-1SC-24° | Hydraulic Tube Assembly (Straight) 10-L3780-1SC-24° | 2 | H=5500 |
| | 256630529608 | 液压管总成（直）10-L4070-1SC-24° | Hydraulic Tube Assembly (Straight) 10-L4070-1SC-24° | 2 | H=6000 |
| | 256630529609 | 液压管总成（直）10-L4630-1SC-24° | Hydraulic Hose Assembly (Straight) 10-L4630-1SC-24° | 2 | H=6500 |
| | 256630529610 | 液压管总成（直）10-L5130-1SC-24° | Hydraulic Hose Assembly (Straight) 10-L5130-1SC-24° | 2 | H=7000 |

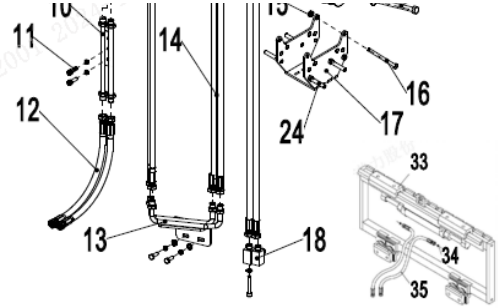


| | | | | | |
|---|---|---|---|---|---|
| 10 | 251330510004 | Hydraulic steel pipe welded joint(24°) | 液压钢管焊合(24°) | 1 | |
| 11 | 910200200058 | Screw GB70.1-M8x25-8.8 | 螺钉GB70.1-M8x25-8.8 | 2 | |
| 12 | 256530529621 | Hydraulic steel pipe assembly (straight) 10-L1800-1SC-24° | 液压管总成（直）10-L1800-1SC-24° | 2 | |
| 13 | 256530510007 | Steel pipe assembly (triple) | 钢管总成（三联） | 1 | |
| 14 | 256630529611 | 液压管总成（直）10-L1880-1SC-24° | Hydraulic Tube Assembly (straight) 10-L1880-1SC-24° | 2 | H=3700 |
| | 256630529612 | 液压管总成（直）10-L1980-1SC-24° | Hydraulic tube assembly (straight) 10-L1980-1SC-24° | 2 | H=4000 |
| | 256630529613 | 液压管总成（直）10-L2100-1SC-24° | Hydraulic Tube Assembly (straight) 10-L2100-1SC-24° | 2 | H=4350 |
| | 256630529614 | 液压管总成（直）10-L2150-1SC-24° | Hydraulic Hose Assembly (Straight) 10-L2150-1SC-24° | 2 | H=4500 |
| | 256630529615 | 液压管总成（直）10-L2250-1SC-24° | Hydraulic Hose Assembly (straight) 10-L2250-1SC-24° | 2 | H=4800 |
| | 256630529616 | 液压管总成（直）10-L2320-1SC-24° | Hydraulic Hose Assembly (Straight) 10-L2320-1SC-24° | 2 | H=5000 |
| | 256630529617 | 液压管总成（直）10-L2490-1SC-24° | Hydraulic Hose Assembly (straight) 10-L2490-1SC-24° | 2 | H=5500 |
| | 256630529618 | 液压管总成（直）10-L2650-1SC-24° | Hydraulic Hose Assembly (straight) 10-L2650-1SC-24° | 2 | H=6000 |
| | 256630529619 | 液压管总成（直）10-L2970-1SC-24° | Hydraulic Tube Assembly (Straight) 10-L2970-1SC-24° | 2 | H=6500 |
| | 256630529620 | 液压管总成（直）10-L3200-1SC-24° | Hydraulic Hose Assembly (straight) 10-L3200-1SC-24° | 2 | H=7000 |
| 15 | 910302300003 | Nut DIN985-M8-8 | 螺母DIN985-M8-8 | 2 | |



**256698501048侧移器及管路安装（三级全自由门架）/Side shifter and pipeline installation (three-stage full-free gantry)**

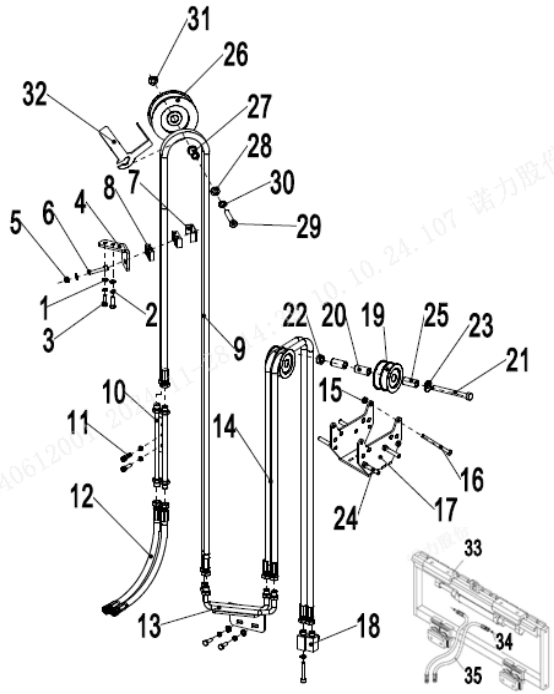


| 序号/NO | 编码/SN | 名称 | Name | 数量/QTY | 备注/Remark |
|---|---|---|---|---|---|
| 16 | 910100100160 | Bolt GB5782-M8x130-8.8 | 螺栓GB5782-M8x130-8.8 | 2 | |
| 17 | 257031010002 | Hose holder (base) | 胶管支架（底座） | 1 | |
| 18 | 251230520010 | Joint(locking bend)8-2xM16x1.5-24° | 接头(锁定弯)8-2xM16x1.5-24° | 2 | |
| 19 | 271527521003 | Pulley Φ74x46(double groove) | 滑轮Φ74x46(双槽) | 2 | |
| 20 | 271527521004 | Bushing Φ20xΦ13x41.5 | 衬套Φ20xΦ13x41.5 | 2 | |
| 21 | 910100100062 | Bolt GB5782-M12x140-8.8 | 螺栓GB5782-M12x140-8.8 | 2 | |
| 22 | 910302300005 | Nut DIN985-M12-8 | 螺母DIN985-M12-8 | 2 | |
| 23 | 256531020005 | Washers | 垫圈 | 4 | |
| 24 | 254130520014 | Pulley stopper | 滑轮挡杆 | 4 | |
| 25 | 255029020023 | Bushing Φ20xΦ13x28 | 衬套Φ20xΦ13x28 | 4 | |
| 26 | 255030520020 | Pulley Φ120x42(double groove) | 滑轮Φ120x42(双槽) | 1 | |
| 27 | 254130520016 | Bushing Φ20xΦ13x43 | 衬套Φ20xΦ13x43 | 2 | |
| 28 | 910400200005 | Large washer GB96.1-12-200HV | 大垫圈GB96.1-12-200HV | 1 | |
| 29 | 910100100054 | Bolt GB5782-M12x80-8.8 | 螺栓GB5782-M12x80-8.8 | 1 | |
| 30 | 910400500008 | Spring washers GB93-12 | 弹簧垫圈GB93-12 | 1 | |
| 31 | 910400100008 | Flat washer GB97.1-12-200HV | 平垫圈GB97.1-12-200HV | 1 | |
| 32 | 256844520024 | Hose stopper 4 | 胶管挡板4 | 1 | |
| 33 | 272042510001 | Side shifter assembly | 侧移器总成(联动) | 1 | |
| 34 | 910800100042 | O-ring 13.6x2.4 | O形圈-外13.6x2.4 | 2 | |
| 35 | 256539529601 | Hydraulic Hose Assembly (90°) 10-L400-1SC-24°-0° | 液压管总成(90°)10-L400-1SC-24°-0° | 2 | |

## 电器系统/Electric system

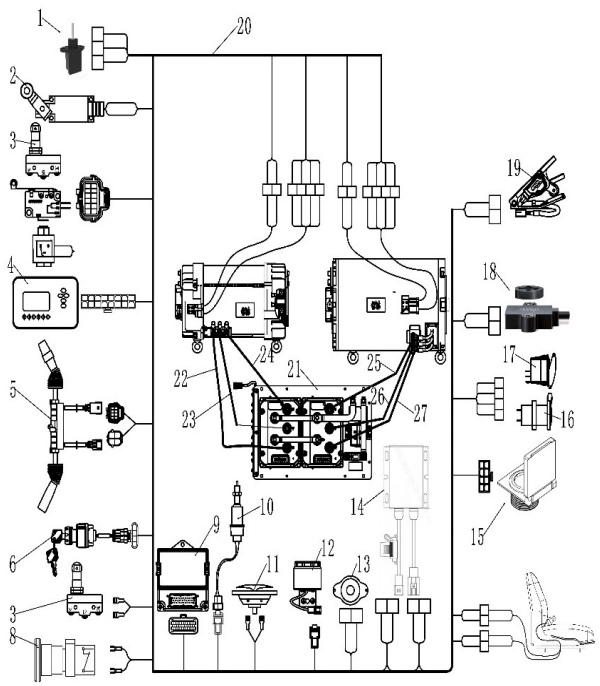


| 序号/NO | 编码/SN | Name | 名称 | 数量/QTY | 备注/Remarks |
|---|---|---|---|---|---|
| 1 | 921800100027 | Sensor | 传感器999666-94810AAA | 1 | Opiton |
| 2 | 920200600010 | Limit switch CZ-3108 | 限位开关CZ-3108 | 1 | Opiton |
| 3 | 920200300004 | Micro Switch(RZ-15GQ22-B3) | 微动开关RZ-15GQ22-B3 | 4 | |
| 4 | 921100100063 | Display(3401T-12-96V) | 仪表3401T-12-96V | 1 | Curtis-F |
| | 921100100155 | Display IDD-E-35CD17B(D36C-R) | 智能仪表D36C-R | 1 | 适配Inmotion |
| 5 | 256733012002 | Combination switch JK361CXNL/3-0000 | 组合开关JK361CXNL/3-0000 | 1 | |
| 6 | 920200200031 | Key | 钥匙开关(一档双路) | 1 | 双档单配 |
| 8 | 920200100020 | Emergency StopSwitch(GSLA5-22PN-40-G01/R) | 急停开关GSLA5-22PN-40-G01/R | 1 | |
| 9 | 251233020001 | Integrated electrical box | 集成电器盒 | 1 | |
| | 921400100201 | Control box WSM-DCDQH-012 | 控制盒WSM-DCDQH-012 | 1 | 比例阀专用 |
| 10 | 920201000002 | Brake switch | 脚踏开关JK231 | 1 | |
| 11 | 920500100001 | Horn(125-DC24V) | 喇叭125-DC24V | 1 | |
| 12 | 920500100002 | Buzzer(DJB-24B) | 喇叭蜂鸣器DJB-24B | 1 | |
| 13 | 920500100008 | Horn(HYDZ-24V) | 喇叭蜂鸣器HYDZ-24V | 1 | |
| 14 | 921900100017 | DC-DC80V/24V | 转换器WDC300NI | 1 | |
| 15 | 920200200075 | Fingerprint unlock FUC-B2 | FUC-B2指纹解锁器 | 1 | Opiton |
| 16 | 921900100026 | USB-YC-A93 | USB-YC-A93 | 1 | Opiton |
| 17 | 920200800020 | Warp Switch(YB-nuoli-003) | 翘板开关YB-nuoli-003 | 1 | Opiton |
| 18 | 921800200007 | Angle potentiometer | 转角电位器 | 1 | Opiton |
| 19 | 921700100005 | Accelerator(FZ3-132-133) | 加速器FZ3-132-133 | 1 | |
| 20 | 256633010003 | Control harness(Inmotion-4P50Q-80V) | 车身线束(Inmotion系统-4P50Q-80V) | 1 | Inmotion系统 |
| | 256633010013 | Control harness(Curtis-F-4P50Q-80V) | 车身线束(Curtis-F-4P50Q-80V) | 1 | Curtis F系统 |
| | 256633010015 | Control harness(Curtis-F-4P50Q-80V-BLF) | 车身线束(Curtis-F-比例阀-4P50Q-80V) | 1 | Curtis F-配恒力比例阀 |
| 21 | 256633212000-S02 | Controller Assembly(Inmotion-4P50Q-80V) | 电控组件(Inmotion系统-4P50Q-80V) | 1 | Inmotion系统 |
| | 256633211000-S02 | Controller Assembly(Curtis-F-4P50Q-80V) | 电控组件(Curtis-F-4P50Q-80V) | 1 | Curtis F系统 |
| | 256633211002-S02 | Controller Assembly(Curtis F-4P50Q-PD-80V) | 电控组件(Curtis F-4P50Q比例阀-80V) | 1 | Curtis F-配恒力比例阀 |
| 22-27 | 256633014001 | Connecting cable assembly4P45-50Q/QL（Inmotic | 连接线缆总成4P45-50Q/QL（Inmotion） | 1 | Inmotion系统 |
| | 256633014002 | Connecting cable assembly4P45-50Q/QL(Curtis F | 连接线缆总成4P45-50Q/QL(Curtis F) | 1 | Curtis F系统 |
| | | | | | |
| | | | | | |

## 电器系统/Electric system

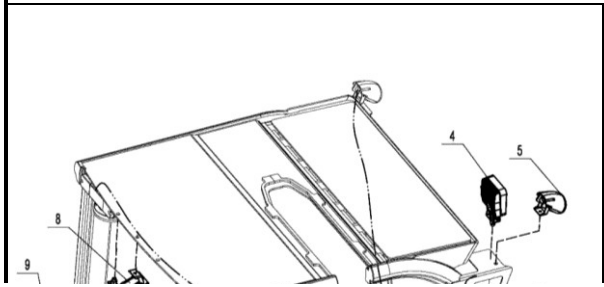


| 序号/NO | 编码/SN | Name | 名称 | 数量/QTY | 备注/Remarks |
|---|---|---|---|---|---|
| 1 | 255034510002 | Left front roof guard frame light harness | 左前车顶护架灯束 | 1 | |
| 2 | 255034510003 | Right front roof guard frame light harness | 右前车顶护架灯束 | 1 | |
| 3 | 后组合灯线束 | Rear combination light harness | 后组合灯线束 | 1 | |
| 4 | 922000100001 | Lamp PDL-LXZM-1 | 灯PDL-LXZM-1 | 3 | |
| 5 | 922000100014 | Lamp A-LJD-A1 | 灯A-LJD-A1 | 2 | 点状蓝光灯 |
| 6 | 922000100059 | Lamp FLDJ-JSD-002 | 灯FLDJ-JSD-002 | 2 | 示宽灯 |
| 7 | 922000100028 | Lamp RB-L590-1 | 灯RB-L590-1 | 2 | 直线红光界灯 |
| | 922000100027 | Lamp RB-L590 | 灯RB-L590 | 2 | 直线蓝光界灯 |
| | 922000100014 | Lamp A-LJD-A1 | 灯A-LJD-A1 | 1 | 点状蓝光灯 |
| | 922000100028 | Lamp RB-L590-1 | 灯RB-L590-1 | 1 | 直线红光界灯 |

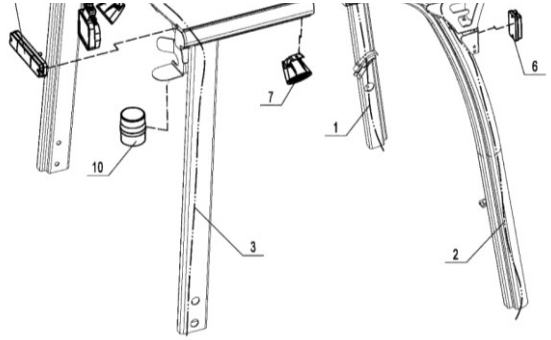


| | | | | | |
|---|---|---|---|---|---|
| 8 | 922000100027 | Lamp RB-L590 | 灯RB-L590 | 1 | 直线蓝光界灯 |
| | 922000100032 | Lamp OW-6202 | 灯OW-6202 | 1 | U形红光界灯 |
| | 922000100041 | Lamp OW-6202 | 灯OW-6202 | 1 | U形蓝光界灯 |
| 9 | 922000100053 | Lamp FLDJ-SSWD-003LED | 灯FLDJ-SSWD-003LED | 2 | 后尾组合灯 |
| 10 | 922000100051 | Lamp FLDJ-JSD-002 | 灯FLDJ-JSD-002 | 1 | 警示灯 |



**256633010012电控组件/ELECTRONIC COMPONENTS—Curtis F系统**

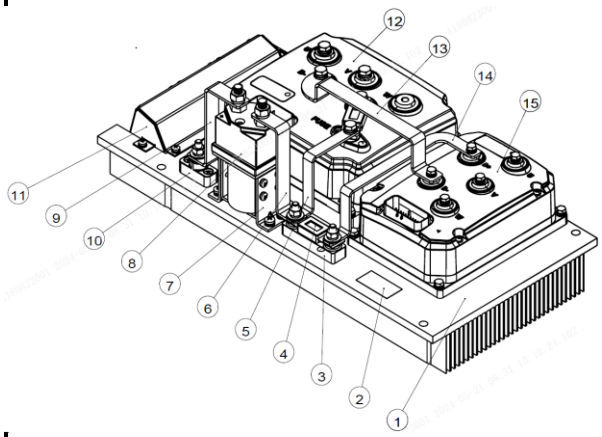


| 序号/NO | 编码/SN | Name | 名称 | 数量/QTY | 备注/Remarks |
|---|---|---|---|---|---|
| 1 | 256633020002 | HEATSINK(WX17750303-026) | 铝板(WX17750303-026) | 1 | |
| 3 | 257598537038 | FUSE HOLDER(WX10077FH02) | 保险丝座(WX10077FH02) | 1 | |
| 4 | 256698537002 | FUSE(10077FZ4VE425.0) | 熔断器(10077FZ4VE425.0) | 2 | |
| 5 | 256633020003 | COPPER BAR(WX17750301-1161) | 铜排(WX17750301-1161) | 1 | |
| 6 | 256633020004 | COPPER BAR(WX17750301-0036) | 铜排(WX17750301-0036) | 1 | |
| 7 | 256698537014 | BRACKET(17750321) | 支架(17750321) | 2 | |
| 8 | 257598537039 | Contactor(13221197) | 接触器(13221197) | 1 | |
| 9 | 257598537016 | FUSE HOLDER(WX10077FH03) | 保险丝座(WX10077FH03) | 1 | |
| 10 | 256698518007 | COPPER BAR(WX17750301-1168) | 铜排(WX17750301-1168) | 1 | |
| 11 | 256633020001 | FAN(WX18101-ASSY009) | 风扇(WX18101-ASSY009) | 1 | |
| 12 | 256698519001-S02 | F10-A-80-750-101-4P50Q-80V-T | F10-A-80-750-101-4P50Q-80V-T | 1 | 主牵引总成（软硬件） |
| 12.1 | 921400100204 | Controller AC-F6-A-80-450-101 | 控制器AC-F10-A-96-650-101 | 1 | 硬件需导入软件 |
| 12 | 256698519003-S02 | F10-A-80-750-101-4P50Q-BLF-80V-T | F10-A-80-750-101-4P50Q-BLF-80V-T | 1 | 软硬件总成(配比例阀) |
| 12.1 | 921400100204 | Controller AC-F6-A-80-450-101 | 控制器AC-F10-A-96-650-101 | 1 | 硬件需导入软件 |
| 13 | 256633020005 | COPPER BAR(WX17750301-1163) | 铜排(WX17750301-1163) | 1 | |
| 14 | 256633020006 | COPPER BAR(WX17750301-1162) | 铜排(WX17750301-1162) | 1 | |
| 15 | 256698519002-S02 | F6-A-80-450-101-4P50Q-80V-P | F6-A-80-450-101-4P50Q-80V-P | 1 | 泵总成（软硬件） |
| 15.1 | 921400100177 | Controller AC-F6-A-80-450-101 | 控制器AC-F6-A-80-450-101 | 1 | 硬件需导入软件 |
| 15 | 256698519004-S02 | F6-A-80-450-101-4P50Q-BLF-80V-P | F6-A-80-450-101-4P50Q-BLF-80V-P | 1 | 软硬件总成(配比例阀) |
| 15.1 | 921400100177 | Controller AC-F6-A-80-450-101 | 控制器AC-F6-A-80-450-101 | 1 | 硬件需导入软件 |

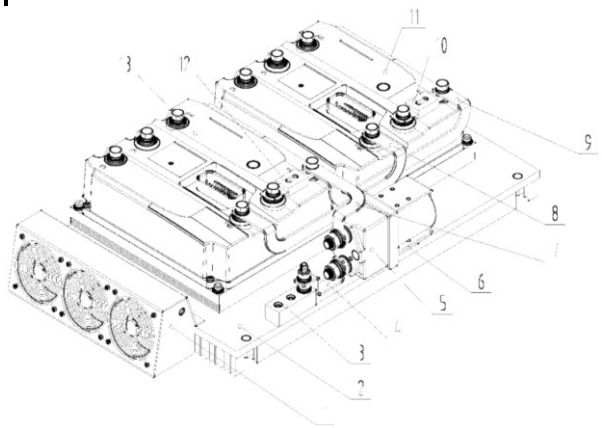

256633010002电控组件/ELECTRONIC COMPONENTS—Inmotion 7系统

| 序号/NO | 编码/SN | Name | 名称 | 数量/QTY | 备注/Remarks |
|---|---|---|---|---|---|
| 1 | 256698510001 | Fan Assy(001410-00041AAC) | 风扇总成(001410-00041AAC) | 1 | |
| 2 | 256698510002 | Cooling panel(003727-00003AAB) | 散热板(003727-00003AAB) | 1 | |
| 3 | 257598537033 | Terminal base(001027-93221AAA) | 接线座(001027-93221AAA) | 1 | |
| 4 | 257598537041 | Copper bar(999666-65746AAA) | 铜排(999666-65746AAA) | 1 | |
| 5 | 257098537029 | Contactor (999666-97503DAA) | 接触器(999666-97503DAA) | 1 | |
| 6 | 256698510003 | Support(002051-93013AAB) | 支架(002051-93013AAB) | 1 | |
| 7 | 256698510004 | COPPER BAR(999666-67115BAA) | 铜排(999666-67115BAA) | 1 | |
| 8 | 256698510005 | COPPER BAR(999666-65916AAA) | 铜排(999666-65916AAA) | 1 | |
| 9 | 256698510006 | COPPER BAR(999666-65917AAA) | 铜排(999666-65917AAA) | 1 | |
| 10 | 257598537045 | FUSE(999666-96322AAA) | 保险丝(999666-96322AAA) | 1 | |
| 11 | 256698519006-S02 | ACS80L50-C35T-4P50Q-P | ACS80L50-C35T-4P50Q-P | 1 | 泵总成（软硬件） |
| 11.1 | 921400100206 | Controller ACS80L50-C35T | 控制器ACS80L50-C35T | 1 | 硬件需导入软件 |
| 12 | 257598537045 | FUSE(999666-96322AAA) | 保险丝(999666-96322AAA) | 1 | |
| 13 | 256698519005-S02 | ACS80L50-C35T-4P50Q-T | ACS80L50-C35T-4P50Q-T | 1 | 主牵引总成（软硬件） |
| 13.1 | 921400100206 | Controller ACS80L50-C35T | 控制器ACS80L50-C35T | 1 | 硬件需导入软件 |



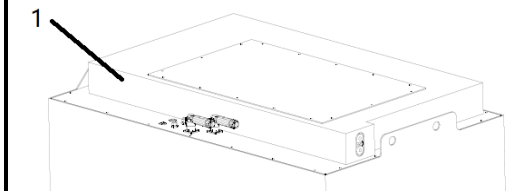


蓄电池/BATTERY

| 序号/NO | 编码/SN | Name | 名称 | 数量/QTY | 备注/Remarks |
|---|---|---|---|---|---|
| 1 | 256637013007 | Lithium battery 76.8V554Ah | 锂电池76.8V554Ah | 1 | 554Ah |
| | 256637013008 | Lithium battery 76.8V554Ah-H | 锂电池76.8V554Ah 加热 | 1 | 554Ah（加热） |
| | 256637013011 | Lithium battery 76.8V412Ah | 锂电池76.8V412Ah | 1 | 412Ah |
| | 256637013012 | Lithium battery 76.8V412Ah-H | 锂电池76.8V412Ah 加热 | 1 | 412Ah（加热） |
| | 256637013014 | Lithium battery 76.8V690Ah | 锂电池76.8V690Ah | 1 | 690Ah |
| | 256637013015 | Lithium battery 76.8V618Ah | 锂电池76.8V618Ah | 1 | 618Ah |
| 2 | 256836512028 | Li Charger80V200A-5P(356～520V) | 充电器80200-R320五芯(三相356～520通用） | 1 | 356～520V |
| | 256836512026 | Li Charger80V200A-4P(356～520V) | 充电器80200-R320四芯(三相356～520通用） | 1 | 356～520V |

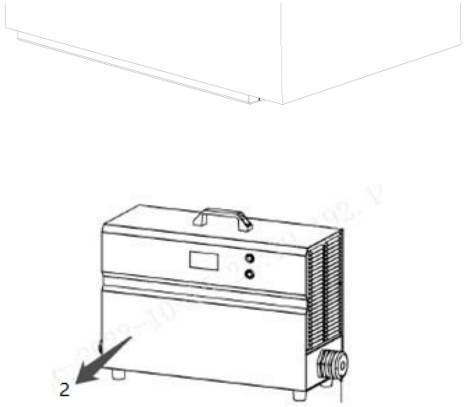
2

| | | | | | |
|---|---|---|---|---|---|
| | | | | | |
| | | | | | |
| | | | | | |
| | | | | | |
| | | | | | |
| | | | | | |
| | | | | | |
| | | | | | |
| | | | | | |
| | | | | | |
| | | | | | |
| | | | | | |
| | | | | | |
| | | | | | |
| | | | | | |
| | | | | | |
| | | | | | |
| | | | | | |
| | | | | | |
| | | | | | |